#5508	Metallized polypropylene capacitors	PPM 800-2.0 r K

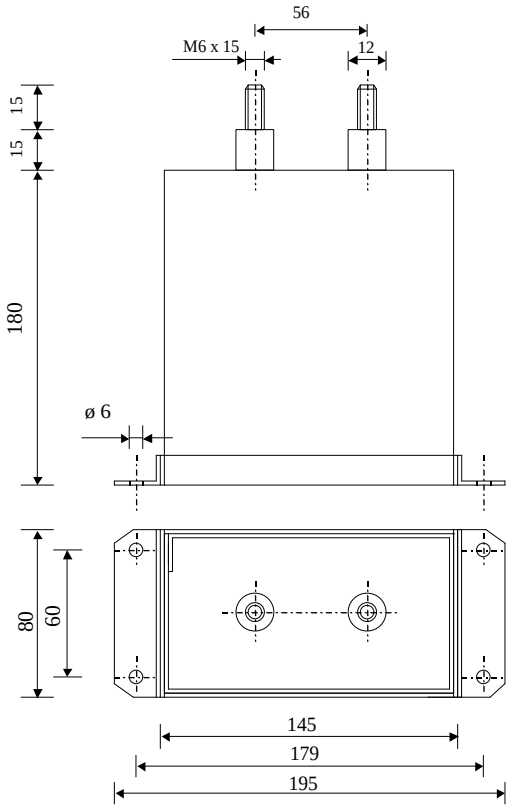

Dielectric of metallized polypropylene

Threaded outputs

Resin end sealing

Aluminium case thick 1.2 mm

Parameter	Symbol		Value	Unit	Condition
Capacitance	C		2	µF	1 V / 1 kHz
Tolerance			± 10	%	
Rated voltage	Un DC		8'000	VDC	
Rated voltage	Un AC		2600	Veff	50 to 400 Hz
RMS Current	Ieff max		20	Aeff	10 kHz
slope of voltage variation	du/dt max.		500	V/µsec	max. repetitive
Repetitive surge current	I cr. max		1000	A	
Tangente delta	tgδ		7	10^{-4}	1 V / 1 kHz
Equivalent serie resistance	ESR		≤ 25	mΩ	10 kHz
Stray inductance	ESL		≤ 250	nH	
Insulation resistance	Ri x C		> 20'000	s	500 VDC - 1 min
Test voltage between terminals	U T1		12'000	VDC	10 s
Test voltage between terminals to case	U T2		12'000	VDC	10 s
Operating temp.			- 25 / + 70 °C		
Estimated operational life (-3%)			100'000	h	Un DC / 70°C
Dimension	**Symbol**			**Unit**	**Conditions**
Width	B		80	mm	
Length	L		145	mm	
Height	H		180	mm	
Thread			M6 x 15	mm	
Thread spacing			56	mm	
	M1				
	M0				
	Modification	Date	Visa émetteur		

Condensateurs
Kondensatoren
Capacitors

CH 1401 Yverdon-les-Bains
Tel.: ++41 24 445 66 88
Fax: ++41 24 445 66 89

Le Lanché Capacitors
A FISCHER & TAUBCHE COMPANY

HJJ | 29.08.2005 | faisab5508.XLS