Leclanché Capacitors
A FISCHER & TAUSCHE COMPANY

Application:	**DC/AC capacitor for general use in power electronics also for nonsinusoidal voltages and currents**		
Order code:	**PPM 240-5.0 uv**		
Standards:	acc. to IEC 61071:2007		
Approval mark:		UL810	
Characteristics			
Rated capacitance	C_N	5	µF ±5%
Rated d.c. voltage	U_{NDC}	2400	V d.c.
Rated a.c. voltage	U_{NAC}	700	V a.c.
Max. rms voltage (sinusoidal)	U_{rms}	500	V
Non-recurrent surge voltage	u_s	3600	V
Rated energy	W_N	14.4	Ws
Maximum current	I_{max}	70	A
Maximum peak current	$\hat{I}$	0.8	kA
Maximum surge current	I_s	2.3	kA
Series resistance	R_s	0.76	mΩ
dielectric dissipation factor	$\tan\delta_o$	2	$\times 10^{-4}$
Self discharge time const.	$C \times R_{is}$	5000	s
Self-inductance	**Le**	15	nH
Thermal conditions			
Lowest operating temperature	Θ_{min}	-25	°C
Maximum operating temperature	Θ_{max}	85	°C
Storage temperature	$\Theta_{storage}$	-40..+85	°C
Thermal resistance	R_{th}	5.9	K/W
Humidity class		G	
failure rate		100	FIT*
reference service life		100000	h
at $\Theta_{hotspot}$		≤70	°C

* See FIT-RATE diagram on pg.3

outline drawing

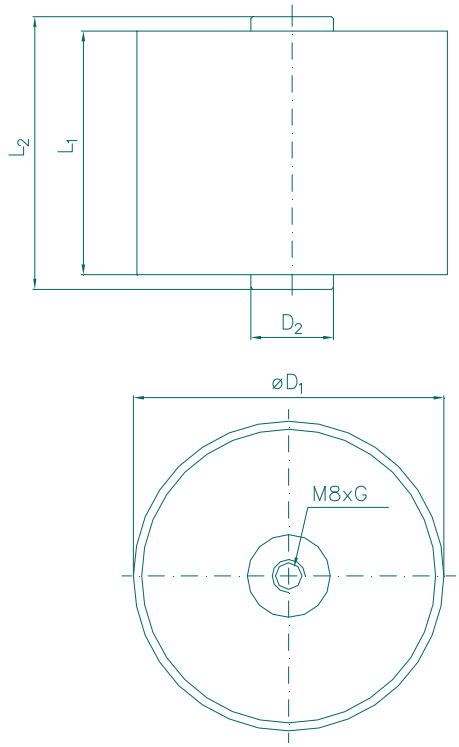

Test data			
Voltage test between terminals	U_{TT}	3600	V DC/10s
Dimensions			
Rated diameter	D_1	75 (±1)	mm
Length of the case	L_1	59 (±1)	mm
total Length	L_2	66 (±1)	mm
Terminal	**G**	M8 x 10	mm
Diameter of terminals	D_2	20	mm
Clearance in air	**L**	114	mm
Creepage distance	**K**	114	mm
Approx weight		0.35	kg

Mechanical characteristics	
Dielectric	metallized polypropylene capacitor, selfhealing
Construction	plastic case with resin moulded winding, UL94: V0
Protection	without internal fuse, to be used only in uncritical environment
Terminals	screw base, inside thread
Impregnant	no liquid impregnants, filled with solidified PUR resin,non PCB
Fire load	14MJ