USB Type A Straight Top Entry

REGAL ELECTRONICS, INC.™

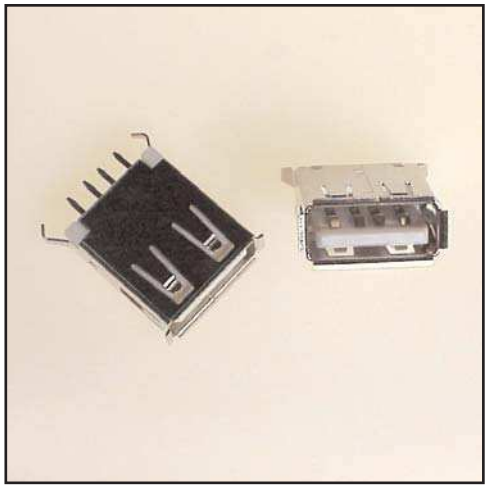

R90S-A-S PCB female receptacle straight vertical mount
Universal Serial Bus Type A

RoHS Compliant

FEATURES:
- Staked housing provides excellent solder tail alignment facilitating PCB mounting
- Housing stand offs for anti solder bridging
- Kinked boardlocks provide secure PCB retention

ELECTRICAL:
- Rated current and voltage: 1.0A Max.
- Insulation resistance: 1000 Megohms Min. at 500Vdc
- Contact resistance: 30 Milliohms Max. at 1 Amp.
- Dielectric withstanding voltage: 750 Vac for 1min.
- Operating temperatures: -55℃ to 85℃

MATERIALS:
- Insulation: PBT UL94V-0
- Shield: Tin plated over nickel underplate
- Contacts: Phosphor bronze Selective Gold plated
- Solder tails: Tin plated

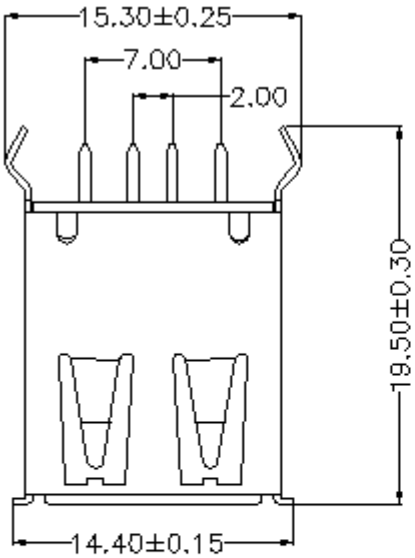

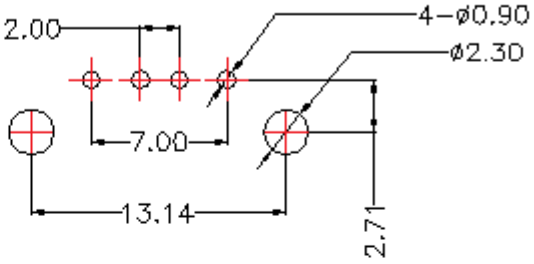

P.C.B.LAYOUT

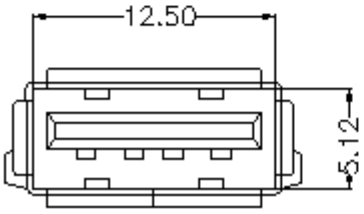

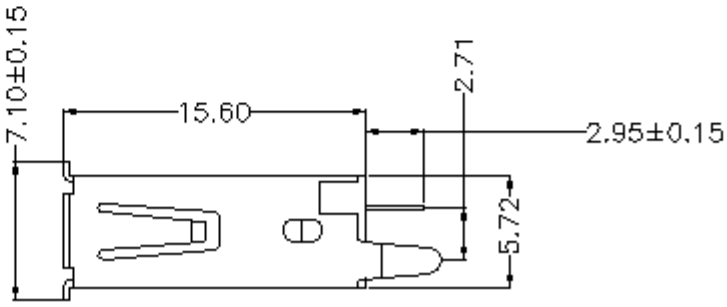

080313

120 San Lucar Court ▼ Sunnyvale, CA 94086 ▼ Phone 800/882-8086 ▼ Fax 800/345-2831
Visit www.regalusa.com ▼ E-mail hal@regalusa.com