TST-600

5.7” Wireless Touch Screen

- > *Advanced wireless touch screen controller*
- > *Compact, lightweight contoured design*
- > *5.7” TFT active matrix color LCD display*
- > *Capacitive touch screen technology*
- > *Smart Graphics™ support [1]*
- > *High-performance H.264 streaming video [3]*
- > *Rava™ SIP intercom and phone technology [3]*
- > *Customizable audio feedback*
- > *Built-in microphone and speakers*
- > *Illuminated buttons and engravable backlit text [2]*
- > *No-button front bezel option included*
- > *Dual-mode RF wireless performance — Extended Range 2.4 GHz RF plus Wi-Fi® [8]*
- > *Instant-Waking® behavior — like an IR remote with all the benefits of 2-way RF!*
- > *Low-profile tabletop docking station [9,10]*
- > *Available in smooth black or white, or textured black finishes*

The next generation TST-600 Wireless Touch Screen from Crestron® delivers enhanced wireless control for the home, boardroom, or classroom in a stylish, ergonomic design. Featuring a high-contrast 5.7” capacitive touch screen, advanced Smart Graphics™, Rava™ SIP Intercom, high-performance H.264 streaming video, audio feedback, optional backlit pushbuttons, and dual-mode RF wireless performance, the TST-600 offers a mobile touch screen experience like no other.

Advanced Touch Screen Control

A Crestron touch screen offers an ideal user-interface for controlling all the technology in your home, boardroom, classroom, courtroom, or command center. Touch screens do away with piles of remote controls, cluttered wall switches, and cryptic computer screens, simplifying and enhancing the way you use technology. For controlling audio, video, lighting, shades, HVAC, security, and other systems, Crestron touch screens are fully-customizable with easy-to-use controls and icons, true feedback and real-time status display, live streaming video, and advanced navigation of digital media servers, tuners, and other devices.

Smart Graphics™[1]

Crestron touch screens use Smart Graphics to deliver the ultimate user experience *and* the ultimate value by enabling the creation of dynamically rich user interfaces with incredible efficiency and unparalleled functionality. Using Smart Graphics, programmers can swiftly integrate fluid gesture-driven controls, animated feedback, metadata, embedded apps, and full-motion video for a deeply engaging and ultra-intuitive touch screen experience.

Crestron Smart Graphics include the following enhancements:

- Cool-looking graphical buttons, sliders, knobs, and gauges are intuitive and fun to use.
- Kinetic effects enhance the feeling of realism with lists and toolbars that scroll with momentum at the flick of a fingertip.
- Drag-and-drop objects snap into place offering an easy way to switch sources.
- Dashboard widgets personalize the touch screen with clocks, weather, news, and other information.
- Customizable themes allow a completely different look and feel for every user, event, or season.
- Fully-developed SmartObjects™ enable sophisticated control over complex devices with minimal programming.

Tactile Pushbuttons

In addition to its touch screen display, the TST-600 features illuminated tactile pushbuttons for quick access to volume adjustment, channel selection, and on-screen menu navigation functions. Eight additional pushbuttons, elegantly trimmed by illuminated button dividers, flank the edges of the touch screen to support additional programmable functions.

High-quality backlit laser-engraving lends a crisp, legible appearance to button text in both darkened and fully lit rooms.[2] The pushbuttons come pre-engraved with labeling suited to a typical home theater or multimedia presentation application. If needed, customized engraving can be attained simply using Crestron Engraver software.[2] A no-button front bezel is also included with the TST-600, which may be installed in place of the button bezel for a very clean appearance with no front panel pushbuttons.

Two additional “trigger” style buttons are positioned on top of the TST-600 for easy control of the display brightness, sleep mode, and other programmable functions.

On-Screen Keyboard/Mouse

On-screen keyboard and mouse capabilities enable the TST-600 to provide full control of computers running TouchPoint® Virtual Mouse & Keyboard Software (VMK-WIN).

Streaming Video[3]

High-performance streaming video capability makes it possible to view security cameras and other video sources right on the touch screen. Native support for H.264 and MJPEG formats allows the TST-600 to display live streaming video from an IP camera, a streaming server (Crestron CEN-NVS200[4] or similar), a DigitalMedia™ switcher, or a Capture HD® system. Streaming video is delivered to the touch screen over Wi-Fi® or a wired Ethernet connection.[3,5]

Rava™ SIP Intercom[3]

Rava SIP Intercom Technology enables hands-free VoIP communication between any two Rava-enabled Crestron touch screens. Rava works over Ethernet (Wi-Fi or wired[5]), supporting 2-way intercom, video intercom[6], and paging. VoIP phone capability is also possible through integration with an SIP-compatible IP phone system or SIP server, allowing hands-free telephone functionality complete with speed-dialing, caller ID, custom ringers, and other enhancements. Built-in echo cancellation affords true-duplex performance for clear, seamless voice communication using the TST-600’s integrated microphone and speakers.

Audio Feedback

Customized audio files can be loaded to add another dimension to the touch screen graphics using personalized sounds, button feedback, and voice prompts.

Dual-Mode Wireless

To deliver the ultimate in wireless touch screen functionality and performance, the TST-600 employs a combination of Crestron Extended Range 2.4 GHz RF (ER) and Wi-Fi wireless technologies.

- **Extended Range RF (Required) —** Primary touch screen functionality is supported via Crestron ER wireless communications, providing seamless control with true feedback using buttons, sliders, knobs, gauges, and dynamic text. Crestron ER wireless communication is enabled via the CEN-ERFGW-POE Extended Range RF Wireless Gateway[4], affording ultra-dependable wireless performance up to 200 feet indoors[7].
- **Wi-Fi (Optional) —** While the TST-600 can be operated using only ER wireless, advanced wireless capabilities such as streaming video, intercom, and dynamic graphics can only be supported using both ER and Wi-Fi together (dual-mode). Crestron enhanced Wi-Fi wireless performance achieves a remarkable 50 feet omni-directional coverage indoors[7]. The choice of 802.11 a, b, and g protocols affords reliable, high-speed wireless performance in virtually any RF environment. Configuring a network of Wi-Fi enabled Crestron devices can be accomplished in mere minutes using a Crestron CEN-WAP-ABG Wireless Access Point[4].

IMPORTANT: EVERY INSTALLATION OF THE TST-600 REQUIRES A CRESTRON ER WIRELESS GATEWAY TO ENABLE ESSENTIAL WIRELESS CAPABILITY. THE TST-600 WILL NOT WORK WITH WI-FI ALONE.[8]

Instant-Waking®

To ensure the most transparent user experience possible, the TST-600 has been engineered to wake instantly at the press of a button or touch of the touch screen. Button presses are sent immediately, just like an IR remote but with none of IR’s limitations. So spontaneous actions like muting the audio, pausing the video, or changing the channel can be executed on-the-fly with just a single button press.

Extended Battery Life

Instant-Waking also allows the TST-600 to be put to sleep within seconds of putting it down, helping to extend its battery life for several days of typical usage on a single charge. The TST-600 features Lithium ion battery technology for fast-charging, long-lasting performance.

TableTop Docking Station

Placing the touch screen onto its docking station (model TST-600-DS[9]) charges the internal battery, and can provide a wired Ethernet connection in the absence of Wi-Fi. Featuring a low-profile design, the docking station fits easily in a cabinet or drawer, and looks stylish yet unimposing on a countertop or side table.[10]

Interface Module

For easy, versatile placement, the docking station features a single flexible hookup cable. The 9 ft (2.75 m) cable extends from the rear of the docking station to a compact interface module (model TST-600-IMCW[9]), which may be mounted conveniently in a wall box or attached to any flat surface or rack rail. The interface module provides wired connections for power and Ethernet.

SPECIFICATIONS

Note: See also TST-600-DS and TST-600-IMCW for additional specifications.

Touch Screen Display

Display Type: TFT Active matrix color LCD
Size: 5.7 inch (145 mm) diagonal
Aspect Ratio: 4:3 VGA
Resolution: 640 x 480 pixels
Brightness: 350 nits (cd/m²)
Contrast: 800:1
Color Depth: 18-bit, 262k colors
Illumination: Edgelit LED
Viewing Angle: ±80° horizontal, ±70° vertical
Touch Screen: Projected Capacitive

Buttons, Switches, & Indicators

Sleep: (1) Top-mounted pushbutton (left); programmable, normally initiates “Sleep” mode when docked, turns power on/off when undocked; also resets the unit if held for 5 seconds
Brightness: (1) Top-mounted pushbutton (right); programmable, normally sets display brightness level
Hard Keys: (8) Optional pushbuttons, programmable, engravable backlit text[2]

Up/Down: (2) Optional backlit translucent “up/down” pushbuttons, programmable, engravable backlit text on bezel[2]
Thumbpad: (5) Optional backlit translucent pushbuttons for 4-way directional navigation and “enter”, programmable
Battery Switch: (1) Rear panel recessed slide switch, shuts off battery for long-term storage
Battery LED: (1) Green LED, indicates battery condition and charging status when docked

Memory

LPDDR2 RAM: 1 GB
Flash: 4 GB
Maximum Project Size: 512 MB

Graphics Engine

Supports Smart Graphics[a] [1]

Wireless Communication (Primary) – Extended Range RF [8]

RF Transceiver: 2-way RF, 2.4 GHz ISM Channels 11-26 (2400 to 2483.5 MHz), IEEE 802.15.4 compliant
Transmitting Power: 75 mW (Ch.11), 100 mW (Ch.12-23), 15 mW (Ch.24), 3.5 mW (Ch.25), 1 mW (Ch.26) @ High Setting; 1 mW (Ch.11-25), 0.5 mW (Ch.26) @ Low Setting
Range (typical): 100 to 200 feet (30 to 60 m) maximum indoor, 1000 feet (300 m) outdoor, subject to site-specific conditions, roaming is currently not supported
Gateway: Requires a CEN-ERFGW-POE Extended Range RF Gateway[4]

Wireless Communication (Secondary) – Wi-Fi® [8]

Transceiver: IEEE 802.11a/b/g Wi-Fi (5.8 or 2.4 GHz 2-way RF), static IP or dynamic IP via DHCP, 64 and 128-bit WEP encryption
Range: Up to 50 feet (15 m), subject to site-specific conditions, roaming is currently not supported
Gateway: Requires a CEN-WAP-ABG-1G, CEN-WAP-ABG-CM, or similar 802.11a/b/g wireless access point and Ethernet-enabled Crestron control system

Wired Communications

Ethernet[5]: (Via docking station) 10/100 Mbps, auto-switching, auto-negotiating, auto-discovery, full/half duplex, DHCP
USB: USB client for console

Video

Streaming Formats: H.264 (MPEG-4 part 10 AVC), MJPEG [3]

Audio

Features: Built-in microphone and speakers, Rava™ SIP Intercom[3]
Audio Feedback Formats: MP3

Connectors

Docking Connector: (1) multi-pin connector;
Mates with the docking port on the docking station[9]

USB: (1) Mini-B USB console port, for installer use only;
Mini-B to A USB cable included

NOTE: See TST-600-IMCW interface module specification for additional connectors [9]

Battery

Internal Battery: Li-ion, 3.7 Volt, 3600 mAh, model TST-600-BTP[11]
Usage per Charge: 3.5 hours continuous, 100 hours under normal use (10% active duty cycle with standby/power down enabled)
Charging Time: 2.5 hours with touch screen in standby, 3.5 to 5 hours during use

Power Requirements

Power Pack: 0.75 Amps @ 24 Volts DC;
100-240 Volts AC, 50/60 Hz power pack, model PW-2407WU included

Cresnet® Power Usage: 18 Watts (0.75 Amps @ 24 Volts DC), includes TST-600-IMCW module[9]

Note: May be powered by power pack or Cresnet network power, not both. Does not support Cresnet data communication, only power. All power connections are made via the TST-600-IMCW interface module[9]

Environmental

Temperature: 32° to 112°F (0° to 45°C);
50° to 104°F (10° to 40°C) while charging
Humidity: 10% to 90% RH (non-condensing)
Heat Dissipation: 40 BTU/hour

Enclosure

Construction: Plastic, non-slip grips/feet, integral docking station port
Front Bezels: Plastic, button and no-button bezels included, button bezel includes white translucent illuminated Up/Down and Thumbpad buttons and 8 hardkey buttons with illuminated dividers and default backlit text engraving, optional custom backlit text engraving sold separately[2]

Dimensions

Height: 5.10 in (130 mm)
Width: 8.08 in (206 mm)
Depth: 1.59 in (41 mm)

Note: Combined height of the TST-600 touch screen docked on the TST-600-DS docking station[9] is 3.30 in (84 mm)

Weight

22.5 oz (636 g)

TST-600 5.7” Wireless Touch Screen

MODELS & ACCESSORIES

Available Models

TST-600-B-S: 5.7” Wireless Touch Screen, Black Smooth
TST-600-B-T: 5.7” Wireless Touch Screen, Black Textured
TST-600-W-S: 5.7” Wireless Touch Screen, White Smooth

Included Accessories

TST-600-BTP: Battery Pack for TST-600 (Qty. 1 included)
TST-600-DS-B-S: TableTop Docking Station for TST-600, Black Smooth (Qty. 1 included with TST-600-B-S)
TST-600-DS-B-T: TableTop Docking Station for TST-600, Black Textured (Qty. 1 included with TST-600-B-T)
TST-600-DS-W-S: TableTop Docking Station for TST-600, White Smooth (Qty. 1 included with TST-600-W-S)
TST-600-IMCW: Interface Module for TST-600-DS (Qty. 1 included)
PW-2407WU: Wall Mount Power Pack 24VDC, 0.75A, Universal (Qty. 1 included)
TST-600-FPB-S-NB_FRONT_BEZEL: No-Button Bezel Kit for TST-600, Black Smooth (Qty. 1 included with TST-600-B-S)
TST-600-FPB-T-NB_FRONT_BEZEL: No-Button Bezel Kit for TST-600, Black Textured (Qty. 1 included with TST-600-B-T)
TST-600-FPW-S-NB_FRONT_BEZEL: No-Button Bezel Kit for TST-600, White Smooth (Qty. 1 included with TST-600-W-S)

Available Accessories

TST-600-FP-BKLT-B-S_FRONT_BEZEL_BLANK: Button Bezel Kit, No Engraving, Black Smooth
TST-600-FP-BKLT-B-S_FRONT_BEZEL_ENGRAVED: Button Bezel Kit w/Custom Backlit Engraving, Black Smooth
TST-600-FP-BKLT-B-T_FRONT_BEZEL_BLANK: Button Bezel Kit, No Engraving, Black Textured
TST-600-FP-BKLT-B-T_FRONT_BEZEL_ENGRAVED: Button Bezel Kit w/Custom Backlit Engraving, Black Textured
TST-600-FPW-S_FRONT_BEZEL_BLANK: Button Bezel Kit, No Engraving, White Smooth
TST-600-FPW-S_FRONT_BEZEL_ENGRAVED: Button Bezel Kit w/Custom Engraving, White Smooth
TST-600-SMK: Swivel Mount Kit for TST-600-DS
TST-600-DSW: Wall Mount Docking Station for TST-600
CEN-ERFGW-POE: Extended Range RF Wireless Gateway
CEN-WAP-ABG-1G: Wall Mount 802.11a/b/g Wireless Access Point
CEN-WAP-ABG-CM: Ceiling Mount 802.11a/b/g Wireless Access Point
TPS-6X-DS: Desktop Docking Station for TPS-6X (TST-600 compatible)
TPS-6XNL-DS: Desktop Docking Station for TPS-6X (TST-600 compatible), No-Lock
TPS-6X-DS-C: Desktop Docking Station for TPS-6X (TST-600 compatible), Charging Only
TPS-6XNL-DS-C: Desktop Docking Station for TPS-6X (TST-600 compatible), Charging Only, No-Lock
TPS-6X-DSC-LP: Low-Profile Desktop Docking Station for TPS-6X (TST-600 compatible), Charging Only
SMK-6X: Swivel Mount Kit for TPS-6X-DS
CBL-CAT5E-P-50: Ethernet LAN Cable, Plenum, 50 ft
CEN-NVS200: Network Video Streamer
SW-VMK-WIN: TouchPoint® Virtual Mouse & Keyboard Software for Windows®

Notes:

1. Supports Smart Graphics only. Not compatible with “traditional” UI projects.
2. Text engraving is not backlit on the white model. All models include a button bezel with default engraving. Custom engraving is sold separately. All buttons may be removed using the TST-600-FP-NB No-Button Bezel (included).
3. Streaming video, intercom, and dynamic graphics capabilities require dual-mode wireless (ER + Wi-Fi) or a wired Ethernet connection.
4. Item(s) sold separately.
5. Touch screen must be docked to enable wired Ethernet communication.
6. H.264 compatible IP camera required.
7. Wireless range subject to site-specific conditions. Roaming is not supported.
8. ER (Extended Range) RF wireless communication supports basic wireless touch screen functionality, and is required for all wireless applications. For advanced functionality including streaming video, intercom, and dynamic graphics, Wi-Fi wireless communication is also required (dual-mode). The TST-600 will not work with Wi-Fi alone. Advanced functionality can also be enabled while docked through a wired Ethernet LAN connection.
9. TST-600-DS TableTop Docking Station and TST-600-IMCW Interface Module included. Other docking station models available separately. See individual product specifications for additional information.
10. The TST-600 is also compatible with all TPS-6X series docking stations. When docked in a TPS-6X series docking station, the TST-600 does not interface with Cresnet data or wired analog video.
11. Internal battery pack included. Battery pack replacement must be performed by a Crestron qualified technician.

This product may be purchased from an authorized Crestron dealer. To find a dealer, please contact the Crestron sales representative for your area. A list of sales representatives is available online at www.crestron.com/salesreps or by calling 800-237-2041.

The specific patents that cover Crestron products are listed online at: patents.crestron.com.

Crestron, the Crestron logo, Capture HD, Cresnet, DigitalMedia, Instant-Waking, Rava, Smart Graphics, SmartObjects, and TouchPoint are either trademarks or registered trademarks of Crestron Electronics, Inc. in the United States and/or other countries. Windows is either a trademark or registered trademark of Microsoft Corporation in the United States and/or other countries. Wi-Fi is either a trademark or registered trademark of Wi-Fi Alliance in the United States and/or other countries. Other trademarks, registered trademarks, and trade names may be used in this document to refer to either the entities claiming the marks and names or their products. Crestron disclaims any proprietary interest in the marks and names of others. Crestron is not responsible for errors in typography or photography. Specifications are subject to change without notice. ©2014 Crestron Electronics, Inc.

TST-600 5.7” Wireless Touch Screen

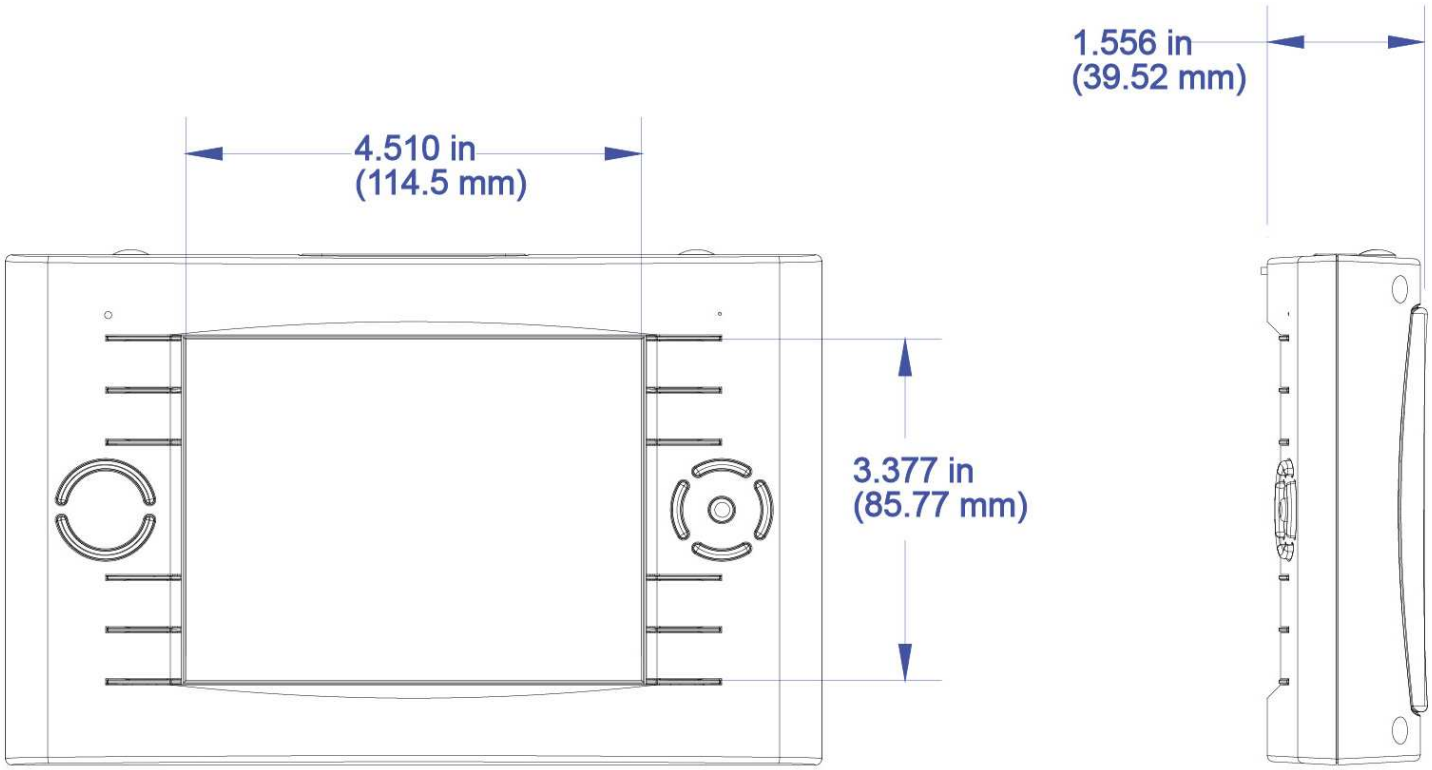

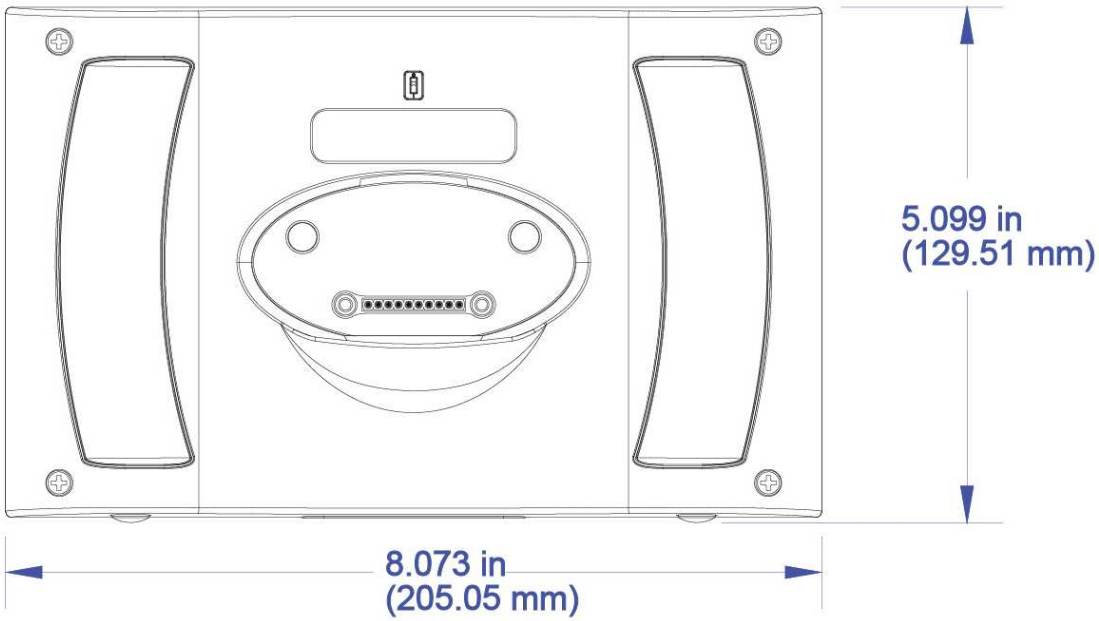

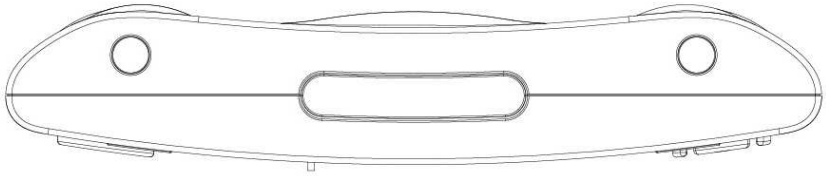

Crestron Electronics, Inc. 15 Volvo Drive | Rockleigh, NJ 07647
Tel: 800.237.2041 / 201.767.3400 | Fax: 201.767.1903
www.crestron.com

All brand names, product names and trademarks are the property of their respective owners.
©2014 Crestron Electronics, Inc.

Specifications subject to change without notice. Revised 02/11/14