FEATURES

- **100 mbar to 10 bar, 1 to 150 psi absolute, gage or differential pressure**
- **Increased media compatibility[1]**
- **Wide operating temperature range**
- **SIL and DIP housings**
- **RoHS compliant**
- **Quality Management System according to ISO 13485:2003 and ISO 9001:2008**

MEDIA COMPATIBILITY[1,2]

High pressure port: To be used with gases and liquids which are compatible with the wetted materials (high temperature polyamide, ceramic AL_2O_3, epoxy, fluorosilicone, glass, silicon).

Low pressure port: To be used with non-corrosive, non-ionic working fluids such as clean dry air, dry gases and the like.

SPECIFICATIONS

Maximum ratings

Supply voltage V_S	... 12 V_{DC}

Environmental

Temperature ranges	
Operating	-40 ... +85 °C (-40 ... +125 °C)[7]
Storage[3]	-40 ... +125 °C
Humidity limits (non-condensing)	...95 %RH[8]
(100 % condensing or direct liquid media on high pressure port[1])	
Vibration	max. 10 g, 10...2000 Hz, random (EN 60068-2-64)
Mechanical shock	max. 50 g, 11 ms (EN 60068-2-27)
Lead solder temperature	max. 270 °C (JESD22-B106D)

ELECTRICAL CONNECTION

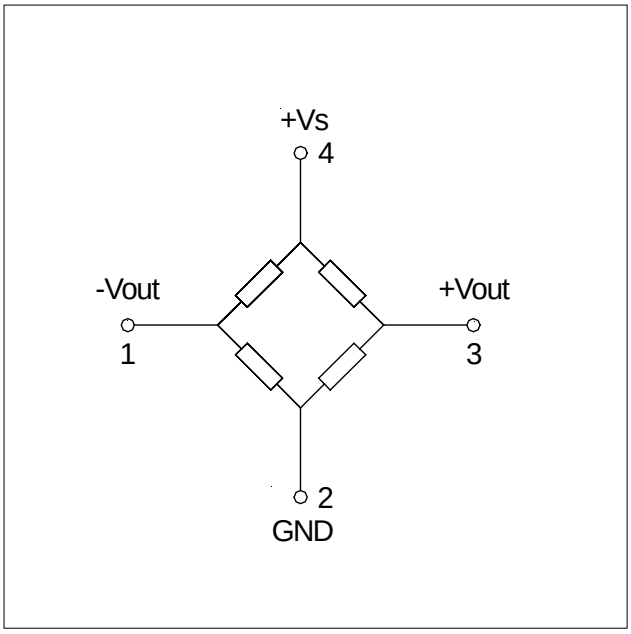

First Sensor
SENSORTECHNICS

www.first-sensor.com
www.sensortechnics.com

PRESSURE SENSOR CHARACTERISTICS

(V_S=5.0 V_{DC}, T_A=25 °C, RH=50 %, pressure applied to high pressure port)

Bar pressure ranges

Part number	Operating pressure	Proof pressure[4]	Full-scale span[5]		
			Min.	Typ.	Max.
HMUM100...	0...100 mbar	2 bar	30 mV	60 mV	120 mV
HMUM350...	0...350 mbar	2 bar	40 mV	100 mV	160 mV
HMUB001...	0...1 bar	5 bar	60 mV	100 mV	140 mV
HMUB2x5...	0...2.5 bar	10 bar	60 mV	100 mV	140 mV
HMUB005...	0...5 bar	14 bar	60 mV	100 mV	140 mV
HMUB010...	0...10 bar	14 bar	60 mV	100 mV	140 mV
HMUB001A...	0...1 bara	4 bara	30 mV	50 mV	70 mV
	0...2 bara	4 bara	60 mV	100 mV	140 mV
HMUB004A...	0...4 bara	8 bara	60 mV	100 mV	140 mV
HMUB008A...	0...8 bara	14 bara	60 mV	100 mV	140 mV

Psi pressure ranges

Part number	Operating pressure	Proof pressure[4]	Full-scale span[5]		
			Min.	Typ.	Max.
HMUM100...	0...1 psi	30 psi	20 mV	41 mV	83 mV
HMUM350...	0...5 psi	30 psi	39 mV	98 mV	158 mV
HMUB001...	0...15 psi	75 psi	61 mV	103 mV	145 mV
HMUB2x5...	0...35 psi	150 psi	57 mV	96 mV	136 mV
HMUB005...	0...70 psi	200 psi	58 mV	96 mV	136 mV
HMUB010...	0...100 psi	200 psi	41 mV	70 mV	97 mV
	0...150 psi	200 psi	61 mV	103 mV	145 mV
HMUB001A...	0...15 psia	58 psia	30 mV	51 mV	73 mV
	0...30 psia	58 psia	61 mV	103 mV	145 mV
HMUB008A...	0...100 psia	200 psia	51 mV	86 mV	121 mV

PERFORMANCE CHARACTERISTICS[2]

(V_S=5.0 V_{DC}, T_A=25 °C, RH=50 %, pressure applied to high pressure port)

Characteristics			Min.	Typ.	Max.	Unit
Zero pressure offset		HMUM100...	-40	0	40	mV
		HMUB001A...	-50	0	50	
		all others	-30	0	30	
Temperature effects (25...85 °C)	Offset	1 psi devices	-0.44	-0.22	0	%FSS/ °C
		100 mbar devices	-0.30	-0.15	0	
		350 mbar/5 psi devices	-0.20	-0.07	0	
		100 psi devices	-0.15	±0.03	0.15	
		1 bar/15 psi absolute devices	-0.60	±0.16	0.60	
		2 bar/30 psi absolute devices	-0.30	±0.08	0.30	
		4 bar absolute devices	-0.20	0	0.20	
		all other absolute devices	-0.10	±0.04	0.10	
		all others	-0.10	±0.02	0.10	
	Span	100 mbar/1 psi devices	-0.23	-0.21	-0.18	
		absolute devices	-0.23	-0.19	-0.17	
		all others	-0.21	-0.19	-0.17	
	Bridge impedance	absolute devices	0.25	0.31	0.36	%/ °C
		all others	0.24	0.26	0.31	
Non-linearity[6]		100 mbar/1 psi devices		±0.50	±0.90	%FSS
		absolute devices		±0.15	±0.35	
		all others		±0.10	±0.40	
Bridge resistance		absolute devices	2.8	3.4	4.0	kΩ
		all others	2.8	3.3	3.8	

Specification notes:

1. All wetted materials are selected to give a high level of media compatibility. Media compatibility refers to media inside the pressure port and lid. Improved media compatibility on high pressure port (backward side of sensor chip) since media has no contact to electronic components. Nevertheless tests with the media used in the specific application are recommended.
2. Sensor is specified in air, changes in sensor behaviour based on physical effects caused by the specific media can occur. Weight of the media and wetting forces can influence the sensor characteristics.
3. Storage temperature of the sensor without package.
4. Proof pressure is the maximum pressure which may be applied without causing durable shifts of the electrical parameters of the sensing element.
5. Full Scale Span (FSS) is the algebraic difference between the output signal for the highest and lowest specified pressure.
6. Non-linearity refers to the **B**est **S**traight **L**ine fit, measured for offset pressure, full scale pressure and 1/2 full scale pressure.
7. Not for all pressure ranges. Please contact First Sensor if operating temperature range -40...+125 °C is required.
8. Tested 1h, up to 85 °C.

Sensors are electronic components and should be handled only in ESD save environments.

PHYSICAL DIMENSIONS AND ELECTRICAL CONNECTION

HMU...DU1..., ...AX1... (SIL, axial no ports)

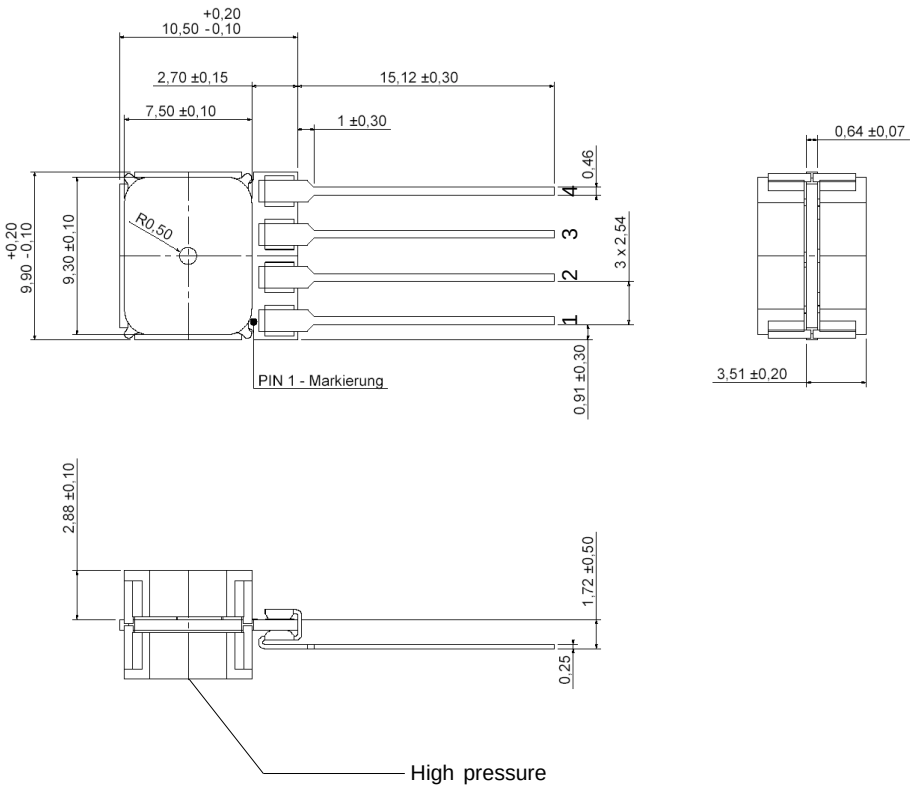

Pin	Connection
1	-Vout
2	GND
3	+Vout
4	+Vs

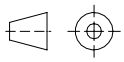

first angle projection

dimensions in mm

PHYSICAL DIMENSIONS AND ELECTRICAL CONNECTION (cont.)

HMU...DU7... (SIL, 2 ports axial opposite side, barbed)

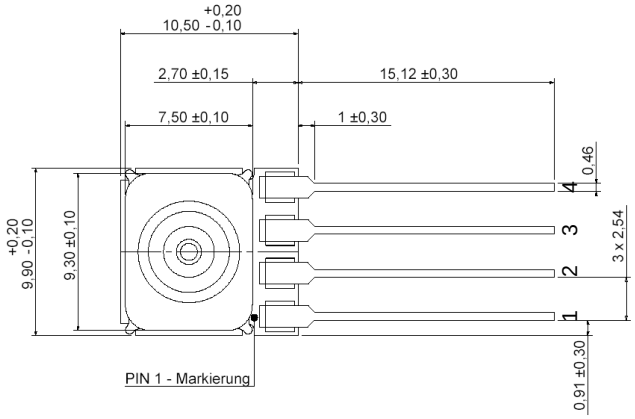

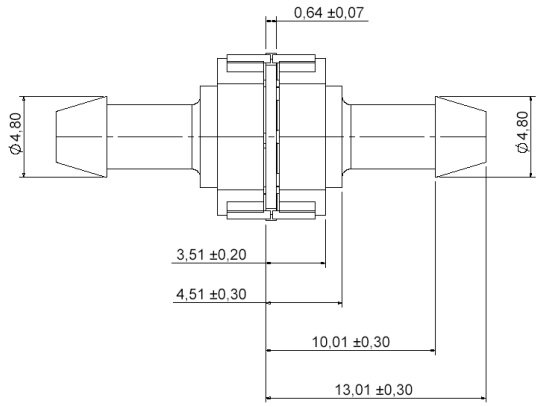

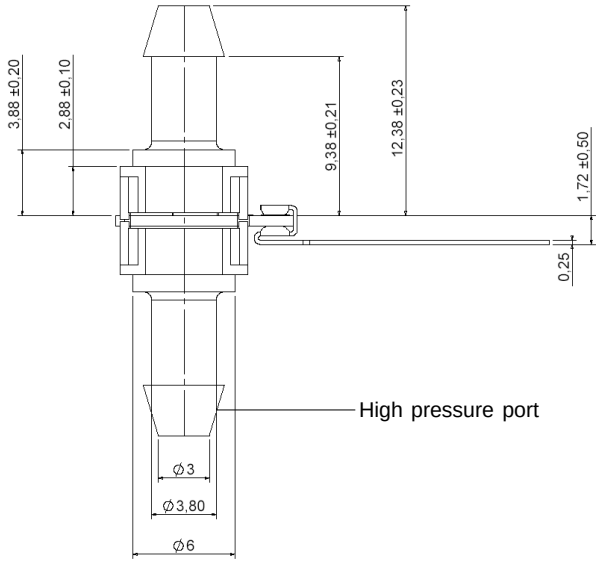

Pin	Connection
1	-Vout
2	GND
3	+Vout
4	+Vs

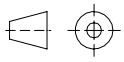

first angle projection

dimensions in mm

PHYSICAL DIMENSIONS AND ELECTRICAL CONNECTION (cont.)

HMU...GX7..., ...AX7... (SIL, 1 port axial, barbed)

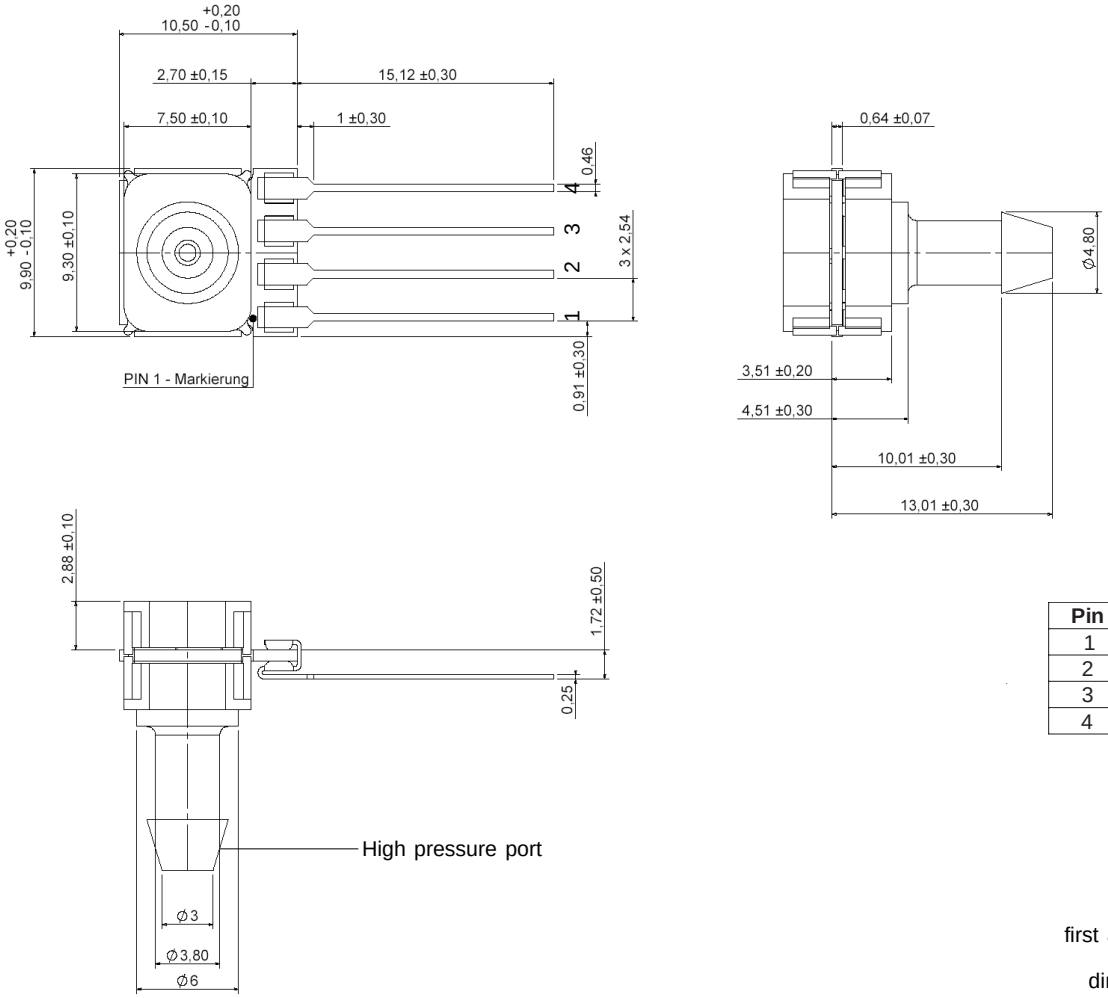

Pin	Connection
1	-Vout
2	GND
3	+Vout
4	+Vs

first angle projection

dimensions in mm

PHYSICAL DIMENSIONS AND ELECTRICAL CONNECTION (cont.)

HMU...GZ7..., ...AZ7... (DIP, 1 port axial, barbed)

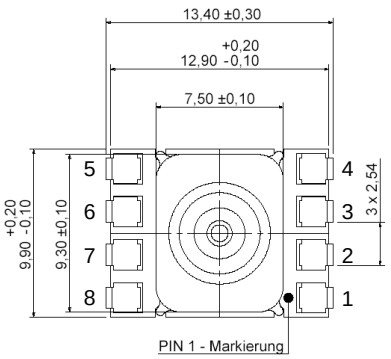

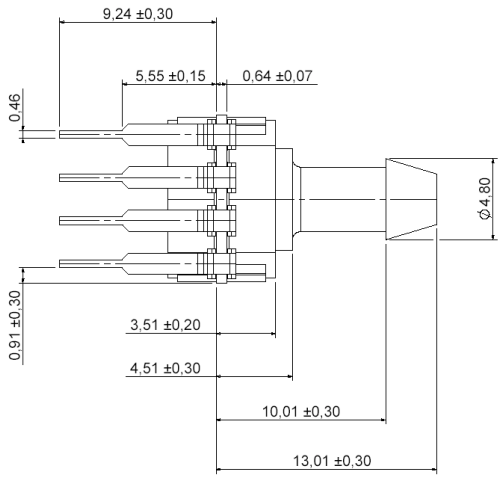

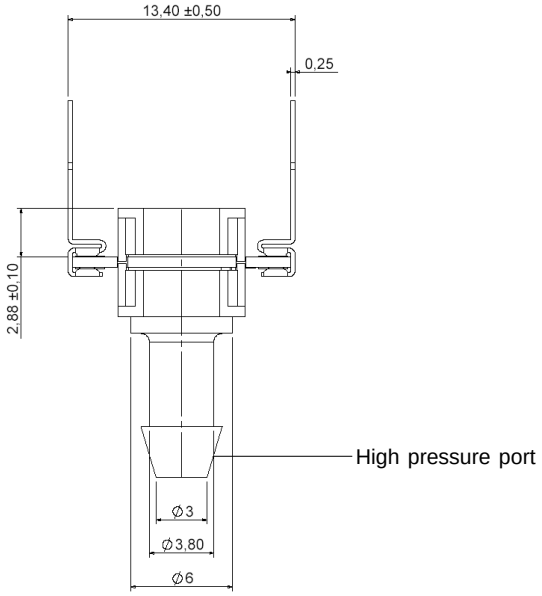

Pin	Connection
1	-Vout
2	GND
3	+Vout
4	+Vs
5	GND
6	GND
7	I / C*
8	I / C*

* Internal connection. Do not connect for any reason

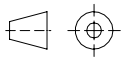

first angle projection

dimensions in mm

PHYSICAL DIMENSIONS AND ELECTRICAL CONNECTION (cont.)

HMU...DU6... (SIL, 2 ports axial opposite side, straight big)

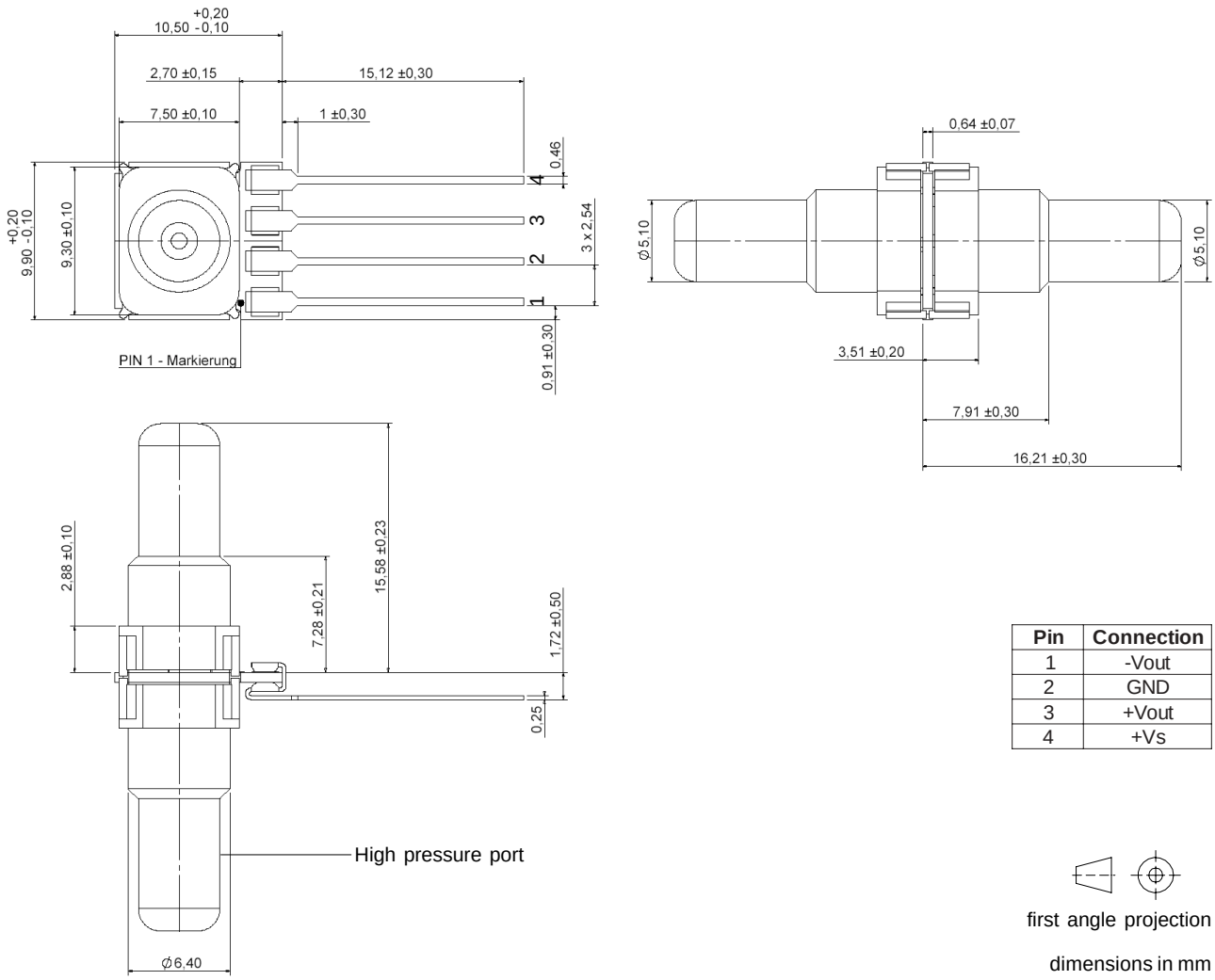

Pin	Connection
1	-Vout
2	GND
3	+Vout
4	+Vs

first angle projection

dimensions in mm

PHYSICAL DIMENSIONS AND ELECTRICAL CONNECTION (cont.)

HMU...GX6..., ...AX6... (SIL, 1 port axial, straight big)

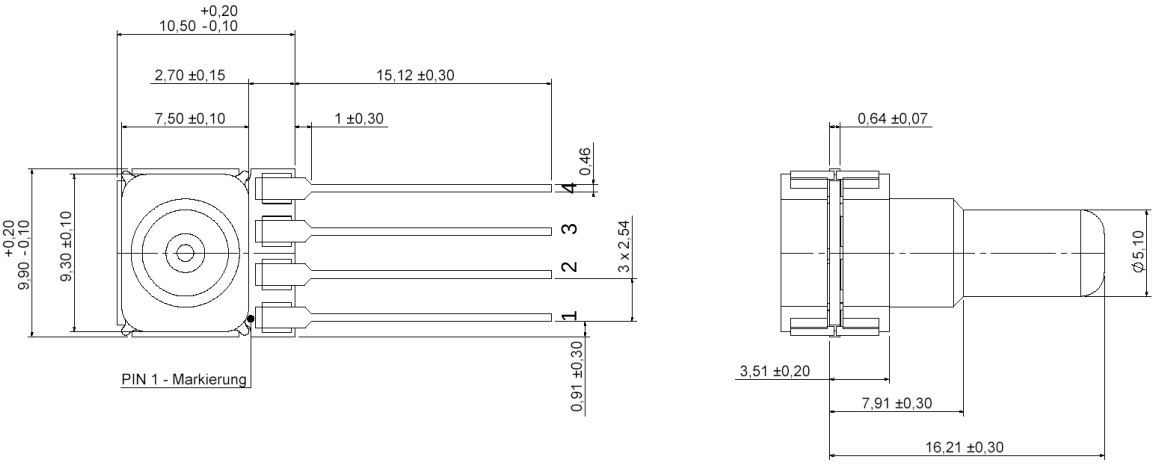

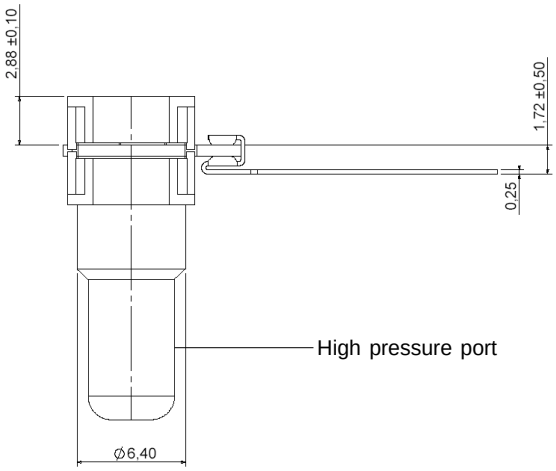

Pin	Connection
1	-Vout
2	GND
3	+Vout
4	+Vs

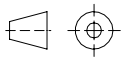

first angle projection

dimensions in mm

PHYSICAL DIMENSIONS AND ELECTRICAL CONNECTION (cont.)

HMU...GZ6..., ...AZ6... (DIP, 1 port axial, straight big)

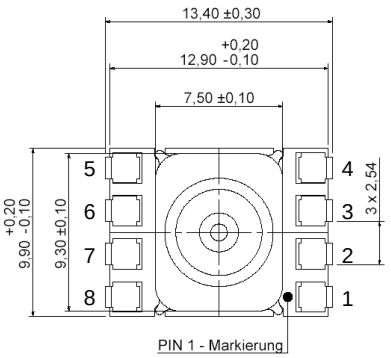

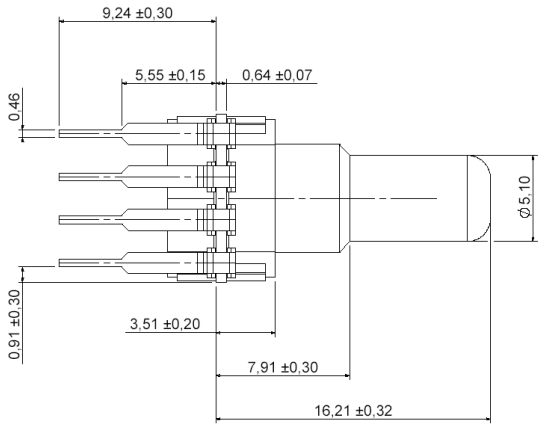

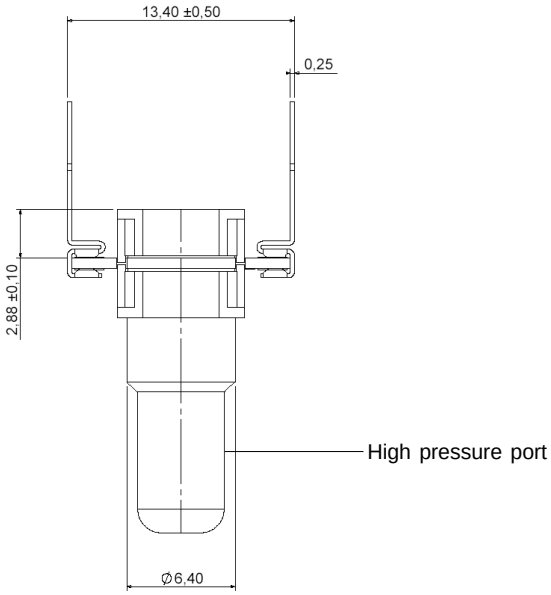

Pin	Connection
1	-Vout
2	GND
3	+Vout
4	+Vs
5	GND
6	GND
7	I / C*
8	I / C*

* Internal connection. Do not connect for any reason

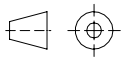

first angle projection

dimensions in mm

PHYSICAL DIMENSIONS AND ELECTRICAL CONNECTION (cont.)

HMU...DU5... (SIL, 2 ports axial opposite side, needle big)

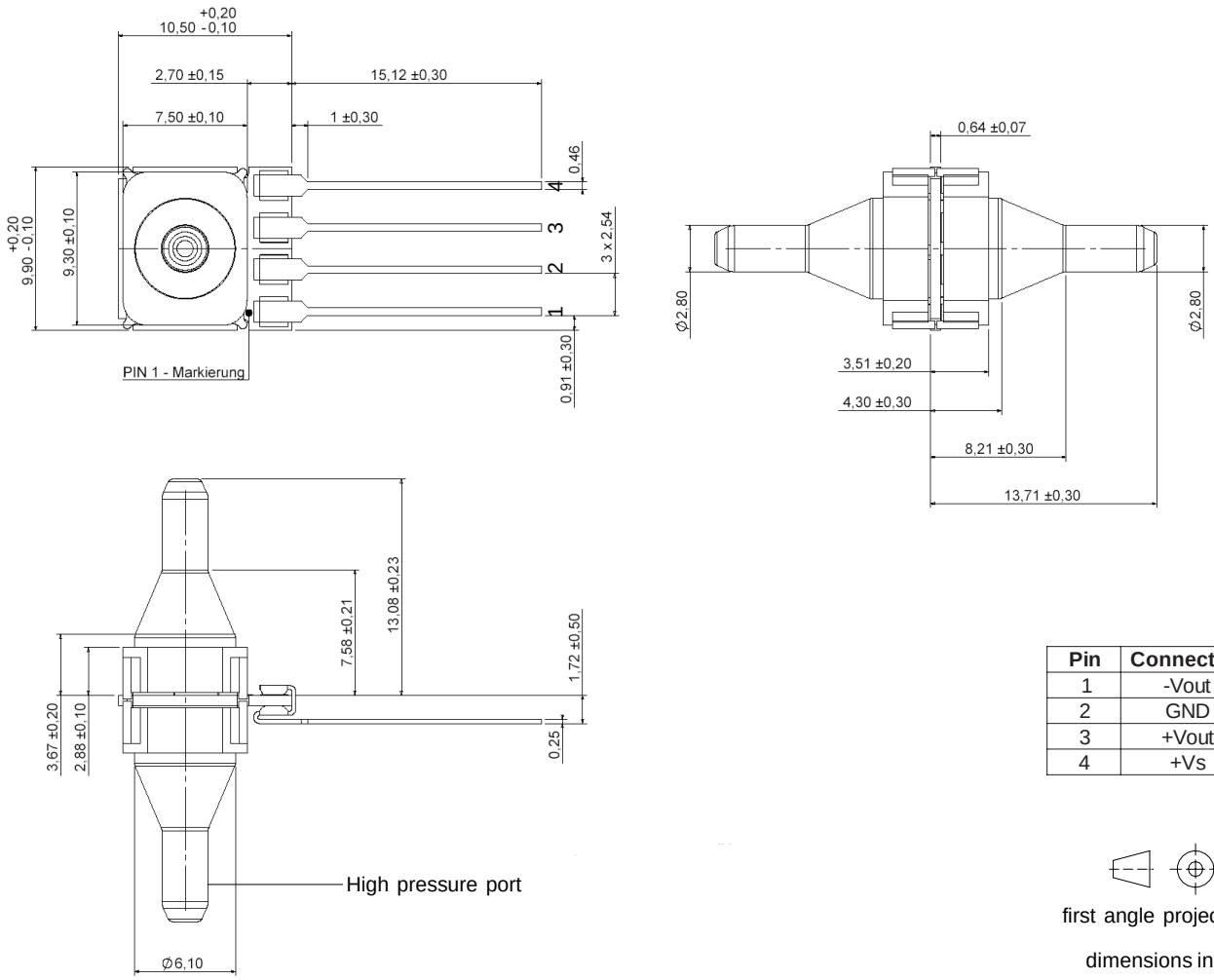

Pin	Connection
1	-Vout
2	GND
3	+Vout
4	+Vs

first angle projection

dimensions in mm

PHYSICAL DIMENSIONS AND ELECTRICAL CONNECTION (cont.)

HMU...GX5..., ...AX5... (SIL, 1 port axial, needle big)

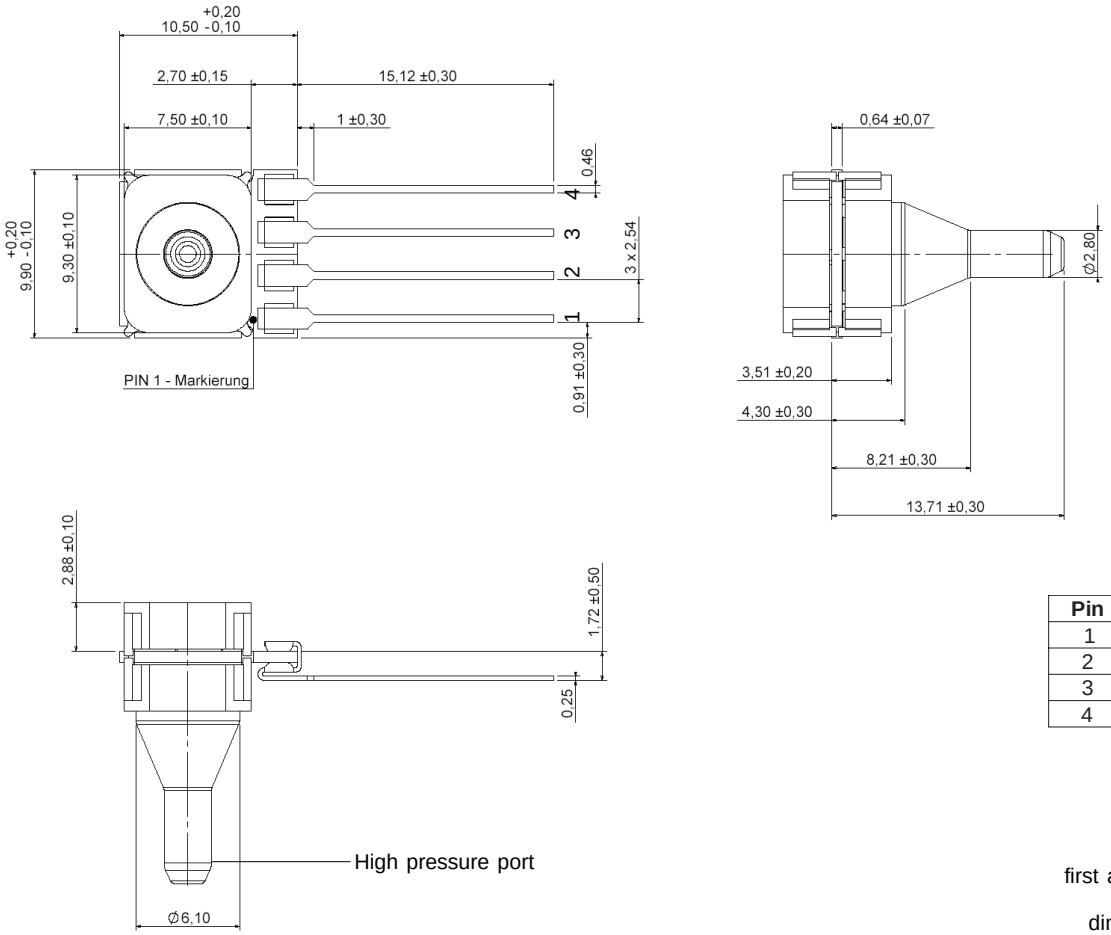

Pin	Connection
1	-Vout
2	GND
3	+Vout
4	+Vs

first angle projection

dimensions in mm

PHYSICAL DIMENSIONS AND ELECTRICAL CONNECTION (cont.)

HMU...GZ5..., ...AZ5... (DIP, 1 port axial, needle big)

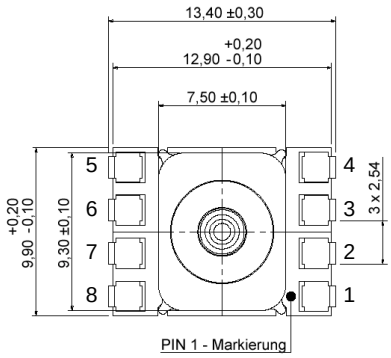

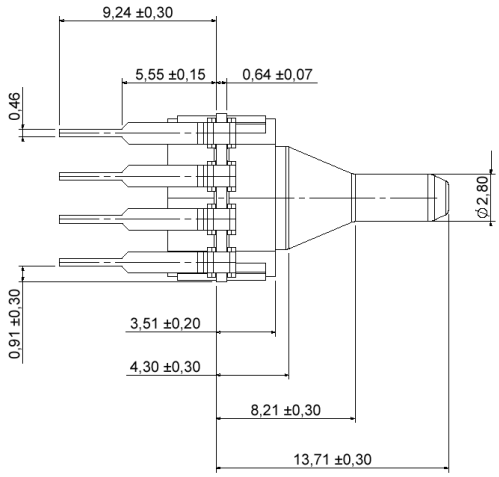

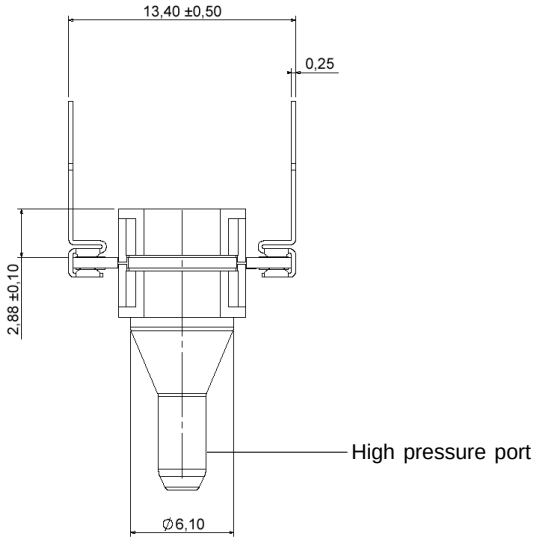

Pin	Connection
1	-Vout
2	GND
3	+Vout
4	+Vs
5	GND
6	GND
7	I / C*
8	I / C*

* Internal connection. Do not connect for any reason

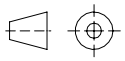

dimensions in mm

NOMENCLATURE

Differential and Gage devices

	Series	Pressure range		Pressure mode / Housing		Porting		Grade	
Options	HMU	M100	100 mbar / 1 psi	DU	Differential, SIL, 2 ports axial opposite side	1*	no port	P	Prime
		M350	350 mbar / 5 psi			7	Barbed		
		B001	1 bar / 15 psi	GX	Gage, SIL,1 port, axial	(5)	Needle big		
		B2x5	2.5 bar / 35 psi	GZ	Gage, DIP, 1 port axial	(6)	Straight big		
		B005	5 bar / 70 psi			* not available for Gage devices, use Differential devices instead			
		B010	10 bar / 100 psi / 150 psi						
						( ) available on request Please contact First Sensor			
Example:	HMU	B001		GZ		7		P	

Absolute devices

	Series	Pressure range		Pressure mode / Housing		Porting		Grade	
Options	HMU	B001	1 bar / 2 bar / 15 psi / 30 psi	AX	Absolute, SIL, 1 port axial	1	no port	P	Prime
		B004	4 bar	AZ	Absolute, DIP, 1 port axial	7	Barbed		
		B008	8 bar / 100 psi			(5)	Needle big		
						(6)	Straight big		
						( ) available on request Please contact First Sensor			
Example:	HMU	B001		AZ		7		P	

LABEL INFORMATION

Digit		1	2	3		4		5		6		7		8		9	10	11	12	13	14
		Series				Pressure range		Pressure unit / pressure mode / calibration		Housing		Porting		Grade/ voltage		Production code					
Char		M	U	-	HMU	7	100 mbar / 1 psi	U	bar, gage/differential, unidirectional	U	SIL, 2 ports axial opposite side	1	no port	-	High, 5 V						
						J	350 mbar / 5 psi					7	Barbed	+	Prime, 5 V						
						A	1 bar / 15 psi	B	bar, gage/differential, bidirectional	X	SIL, 1 port, axial	5	Needle big	/	High, 3 V						
						B	2.5 bar / 35 psi					6	Straight big	#	Prime, 3 V						
						C	5 bar / 70 psi	A	bara, absolute	Z	DIP, 1 port axial										
						M	10 bar / 150 psi / 8 bara														
						N	4 bara														

First Sensor reserves the right to make changes to any products herein. First Sensor does not assume any liability arising out of the application or use of any product or circuit described herein, neither does it convey any license under its patent rights nor the rights of others.

LGA InterCert Certified Quality System EN ISO 13485:2003+AC:2009 DIN EN ISO 9001:2008