LUCASEY®
MOUNTING SYSTEMS

CKLC100CP Dimensions

Conversion from 1-1/4" I.D. NPT Pipe or 1-1/2" O.D. Tubing to 75mm or 100mm Mounting Pattern Flat Screen

Model	LoadLimit (lbs.)	Tilt	Pivot	Mounts to Boss Patterns	Ship. Wt. (lbs.)
CKLC100CP	50	±45°	±90°	75mm & 100mm	3

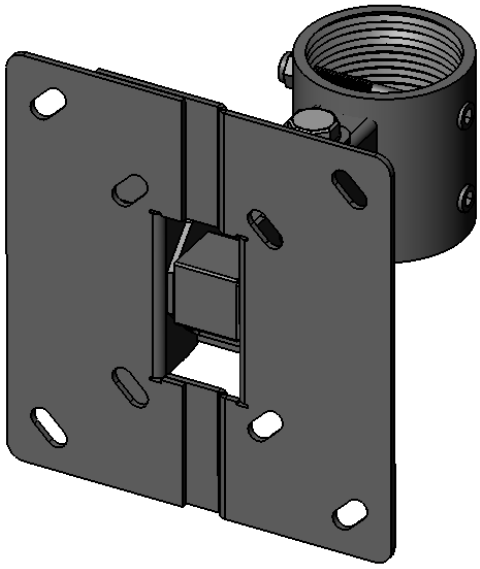

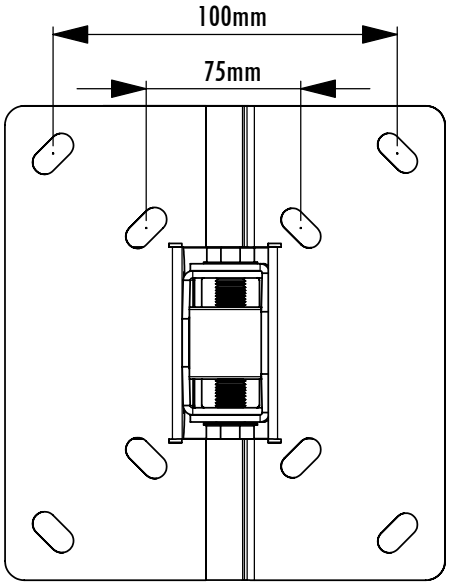

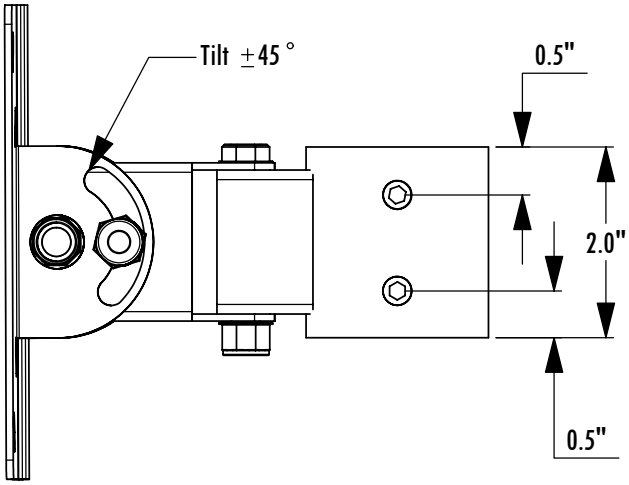

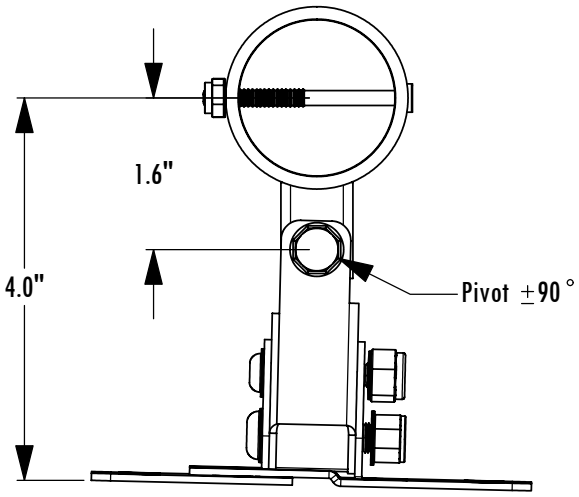

1-800-LUCASEY • 1-510-534-1435

LOAD
50
POUNDS
RATING

©2009 Lucasey Manufacturing Corporation, Oakland, California

Protected under one or more of these U.S. Patent numbers: 3,291,432 3,559,942 3,724,798 DES.270,689 4,613,109 4,878,645 4,852,842 DES.309,5624,973,023 5,169,114 5,255,884 5,310,152 5,522,576 5,621,614 Re.35,677 DES.398,834 5,826,384 5,941,492 5,964,068 6,060,661 6,102,398 6,158,704 6,454,116B1 6,761,276B2 6,806,425B1

CKLC100CP_Dim - 3/30/09 - M.R.B.