LUCASEY®
MOUNTING SYSTEMS

MRASCR
Monitor Ring Suspension Clamp

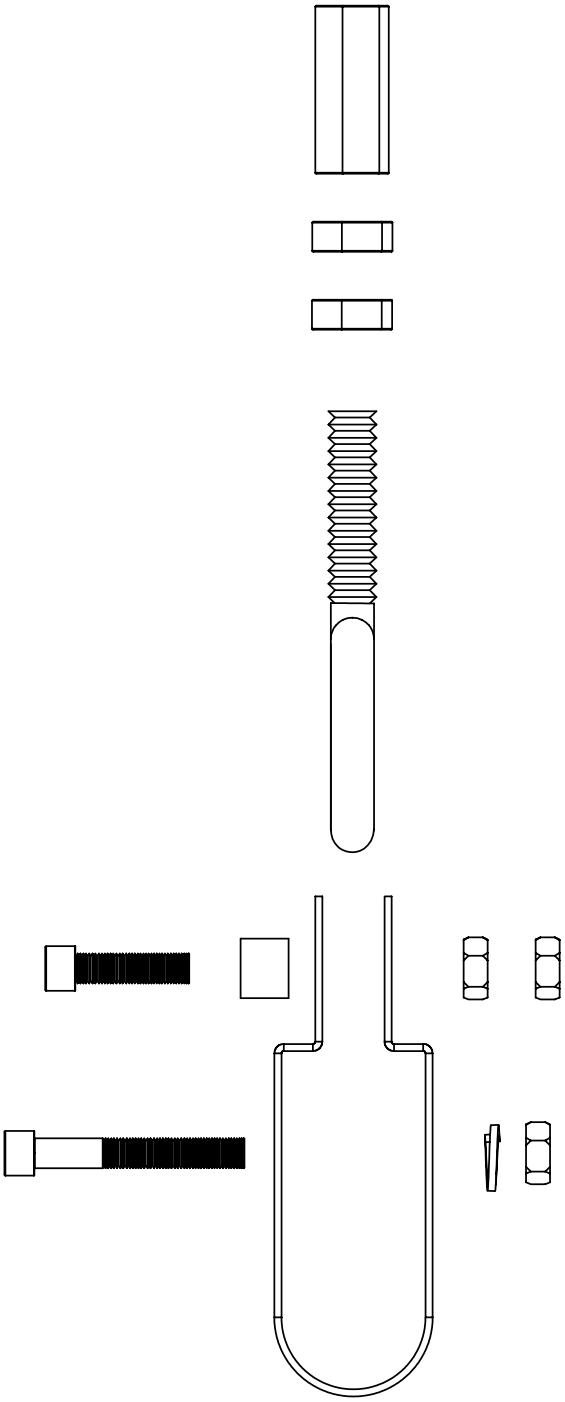

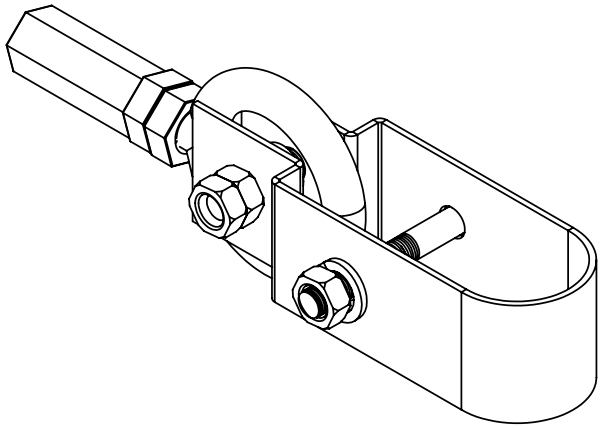

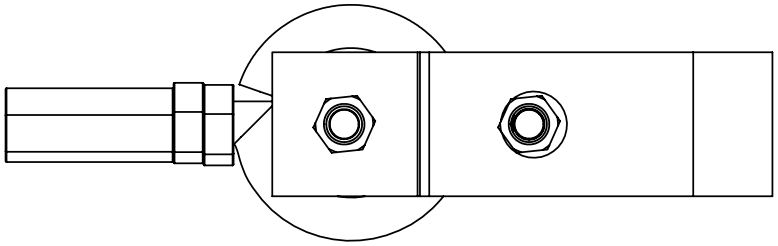

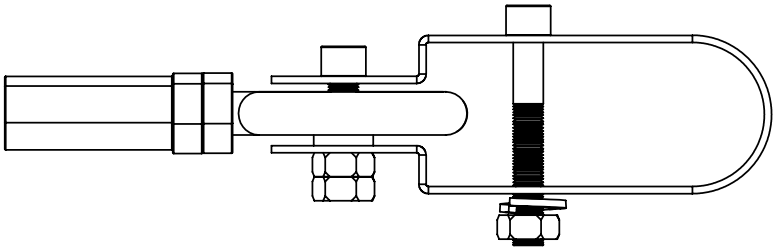

1-800-LUCASEY • 1-510-534-1435

LOAD
500
POUNDS
RATING

©2005 Lucasey Manufacturing Corporation, Oakland, California

Protected under one or more of these U.S. Patent numbers: 3,291,432 3,559,942 3,724,798 DES.270,689 4,613,109 4,878,645 4,852,842 DES.309,5624,973,023 5,169,114 5,255,884 5,310,152 5,522,576 5,621,614 Re.35,677 DES.398,834 5,826,384 5,941,492 5,964,068 6,060,661 6,102,398 6,158,704 6,454,116B1 6,761,276B2 6,806,425B1