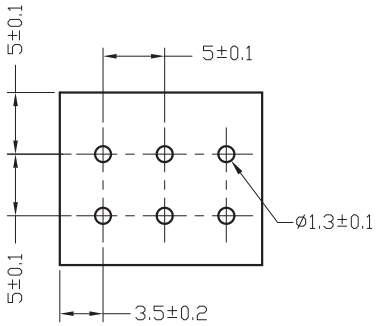

RECOMMENDED PCB LAYOUT - COMPONENT VIEW

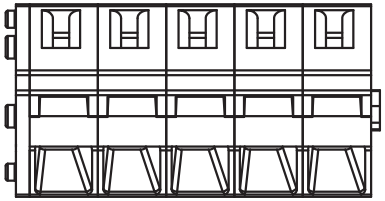

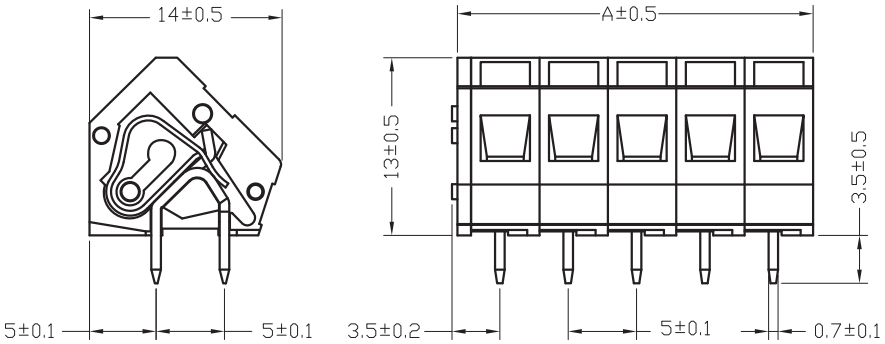

Pitch : 5.00mm			
Poles	A(mm)	Poles	A(mm)
1	6.00	15	76.00
2	11.00	16	81.00
3	16.00	17	86.00
4	21.00	18	91.00
5	26.00	19	96.00
6	31.00	20	101.00
7	36.00	21	106.00
8	41.00	22	111.00
9	46.00	23	116.00
10	51.00	24	121.00
11	56.00		
12	61.00		
13	66.00		
14	71.00		

TECHNICAL CHARACTERISTICS

MATERIAL
INSULATOR: PA 66
FLAMABILITY RATING: UL94-V0
COLOR: GREY
WIRE GUARD: STAINLESS STEEL
CONTACT PIN: BRASS (CuZn)
SOLDER TAIL PLATING: TIN

ENVIRONMENTAL
OPERATING TEMPERATURE: -40 UP TO 115°C
COMPLIANCE: LEAD FREE AND ROHS

ELECTRICAL
CURRENT RATING: 15A
WORKING VOLTAGE: 300VAC
WITHSTANDING VOLTAGE: 1.6KV
CONTACT RESISTANCE: 20 mOhm MAX

STANDARD
CERTIFIED E315414 / MODEL NUMBER 413 B

WIRE RANGE:
SOLID WIRE: 28-12 AWG / 0.08-3.3MM²
STRANDED WIRE: 28-12 AWG / 0.08-3.3MM²
WIRE STRIP LENGTH: 5-6 MM

MECHANICAL:
PITCH: 5.0MM

SOLDERING: WAVE PROCESS ONLY

PACKAGING: BOX

SERIE 413 B

RoHS Compliant

REV	DATE	FILE	BY
G			
F			
E			
D			
C			
B	24-SEP-13	DWG REVIEW	QL
A	02-JUL-12	PDF	GG

PROJECTION:

APPROVAL: RJ

GENERAL TOLERANCE
.X = +/- 0.2
.XX = +/- 0.15

UNIT: MM
SCALE:
SHEET: 1/1
DRAW:

WÜRTH ELEKTRONIK

DESCRIPTION: SERIE 413 B - 5.00MM SCREWLESS 45° ENTRY 3.3MM² WIRES WR-TBL

WERI PART NO: 691 413 720 0xx B

SIZE **A4**