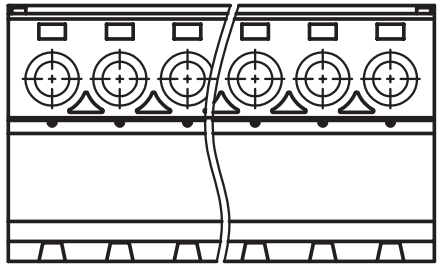

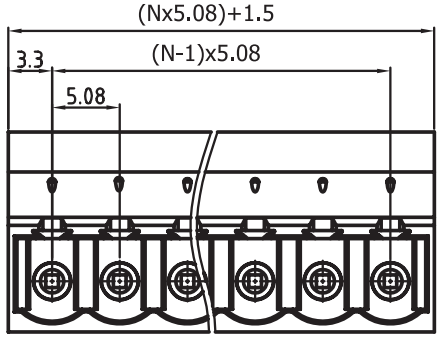

N=Number of contacts

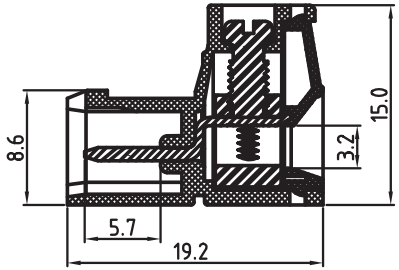

TECHNICAL CHARACTERISTICS

MATERIAL
INSULATOR: PA 66
FLAMABILITY RATING: UL94-V0
COLOR: GREEN
METAL HOUSING: BRASS (CuZn)
TERMINAL SCREW: STEEL ZINC PLATING
TERMINAL SCREW SLOT TYPE: "-"
WIRE GUARD: PhBz TIN PLATED

ENVIRONMENTAL
OPERATING TEMPERATURE: -40 UP TO 105°C
COMPLIANCE: LEAD FREE AND ROHS

ELECTRICAL	cULus
CURRENT RATING:	20A
WORKING VOLTAGE:	300VAC
WITHSTANDING VOLTAGE:	1.6KV
CONTACT RESISTANCE:	20 mOhm max

MECHANICAL

SOLID WIRE:	22-12 AWG / 0.3-3.0MM²
STRANDED WIRE:	22-12 AWG / 0.3-3.0MM²
TORQUE:	5.0Lb-In / 0.56Nm

WIRE STRIPE LENGTH: 7-8MM
SCREW: M3.0
PITCH: 5.08MM

PACKAGING: BOX

SERIE 3485

CERTIFICATION: UNDER PROCESSING

c us

RoHS Compliant

REV	DATE	FILE	BY
G			
F			
E			
D			
C			
B			
A	04-NOV-08	PDF	JP

PROJECTION:

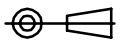

GENERAL TOLERANCE
.X = +/- 0.2
.XX = +/- 0.15

WÜRTH ELEKTRONIK

APPROVAL: RJ

UNIT: MM
SCALE:
SHEET: 1/1
DRAW: MARVIN

DESCRIPTION: SERIE 3485 - 5.08MM REVERSED GENDER VERTICAL CABLE ENTRY PLUG - 3.0MM² WIRES WR-TBL

WERI PART NO: 691 348 500 0xx

SIZE **A4**