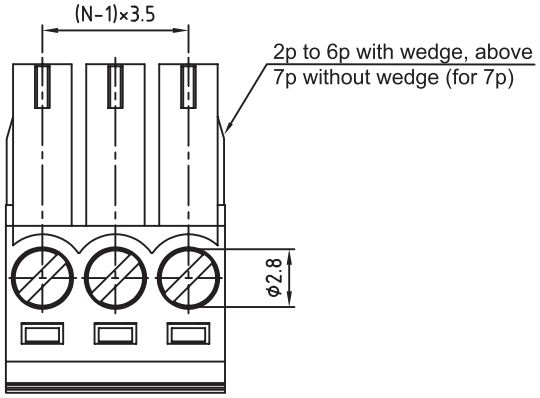

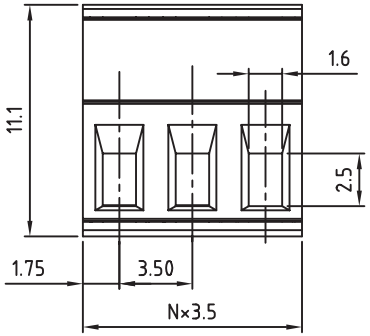

N=Number of contacts

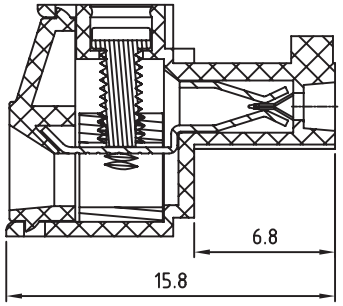

TECHNICAL CHARACTERISTICS

MATERIAL
INSULATOR: PA 66
FLAMABILITY RATING: UL94-V0
COLOR: GREEN
METAL HOUSING: BRASS (CuZn)
TERMINAL SCREW: STEEL ZINC PLATING
TERMINAL SCREW SLOT TYPE: "-"
WIRE GUARD: PhBz TIN PLATED

ENVIRONMENTAL
OPERATING TEMPERATURE: -40 UP TO 105°C
COMPLIANCE: LEAD FREE AND ROHS

ELECTRICAL	cULus	VDE
CURRENT RATING:	10A	10.5A
WORKING VOLTAGE:	300VAC	300VAC
WITHSTANDING VOLTAGE:	1.6KV	2.5KV
CONTACT RESISTANCE:	20 mOhm max	

MECHANICAL
SOLID WIRE: 26-16 AWG / 0.13-1.5MM²
STRANDED WIRE: 26-16 AWG / 0.13-1.5MM²
TORQUE: 3.0Lb-In / 0.34Nm

WIRE STRIPE LENGTH: 6-7MM
SCREW: M2.0
PITCH: 3.5MM

PACKAGING: BOX

SERIE 3611

CERTIFICATION

RoHS Compliant

REV	DATE	FILE	BY
G			
F			
E			
D			
C			
B			
A	31-OCT-08	PDF	JP

PROJECTION:

APPROVAL: RJ

GENERAL TOLERANCE
.X = +/- 0.2
.XX = +/- 0.15

UNIT: MM
SCALE:
SHEET: 1/1
DRAW: MARVIN

WÜRTH ELEKTRONIK

DESCRIPTION: SERIE 3611 - 3.50MM VERTICAL CABLE ENTRY PLUG 1.5MM² WIRES WR-TBL

WERI PART NO: 691 361 100 0xx

SIZE **A4**