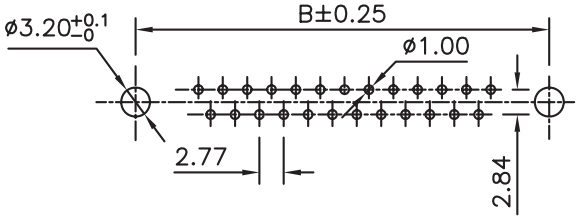

PCB LAYOUT - COMPONENT VIEW

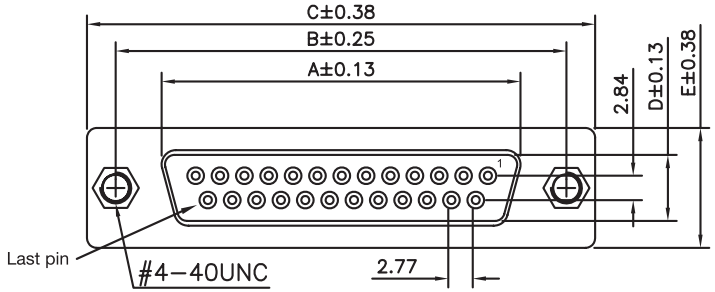

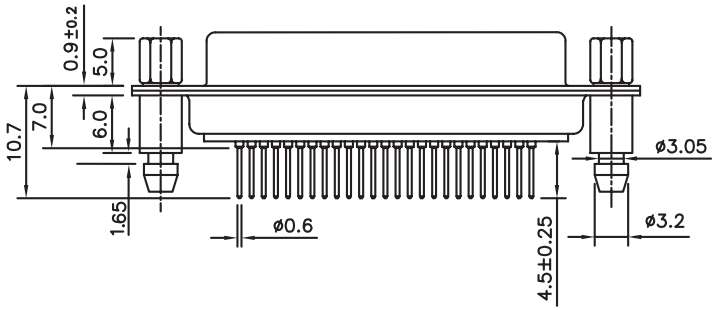

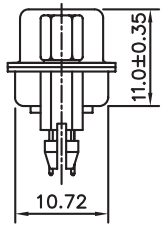

TECHNICAL CHARACTERISTICS

MATERIAL
INSULATOR: PBT
FLAMABILITY RATING: UL94-V0
COLOR: WHITE
CONTACT MATERIAL: COPPER ALLOY
CONTACT TYPE: STAMPED
CONTACT PLATING: GOLD
SHIELDING: STEEL TIN PLATED
QUALITY CLASS: 3 AS PER CECC 75 301-802

ENVIRONMENTAL
OPERATING TEMPERATURE: -40 UP TO 85°C
COMPLIANCE: LEAD FREE AND ROHS

ELECTRICAL
CURRENT RATING: 3A
WORKING VOLTAGE: 125V AC
INSULATOR RESISTANCE: >5000 MOHM
DIELECTRIC WITHSTANDING VOLTAGE: 1000V AC/MN
CONTACT RESISTANCE: 30 mOHM MAX

SOLDERING
WAVE PROCESS ONLY

PACKAGING
TRAY

DIMENSION

PINS	A	B	C	D	E
9	16.33	24.99	30.81	7.90	12.50
15	24.66	33.32	39.14	7.90	12.50
25	38.38	47.04	53.04	7.90	12.50
37	54.84	63.50	69.32	7.90	12.50

RoHS Compliant

REV	DATE	FILE	BY
H	05-JUN-14	OFFSET DELETED	AS

PROJECTION:

GENERAL TOLERANCE
.X = +/_ 0.2
.XX = +/_ 0.15

APPROVAL: RJ

UNIT: MM
SCALE:
SHEET: 1/1
DRAW: PEARL

WÜRTH ELEKTRONIK

DESCRIPTION: FEMALE PCB D-SUB WITH UNC 4-40 HEX SCREW

WERI PART NO: 618 0xx 293 21

SIZE **A4**