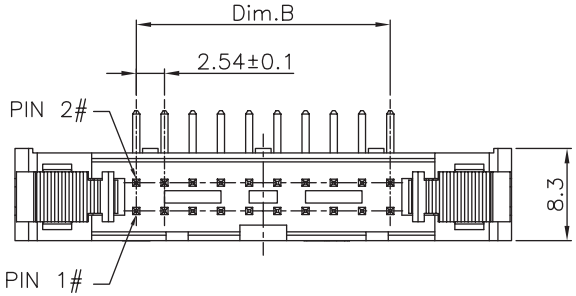

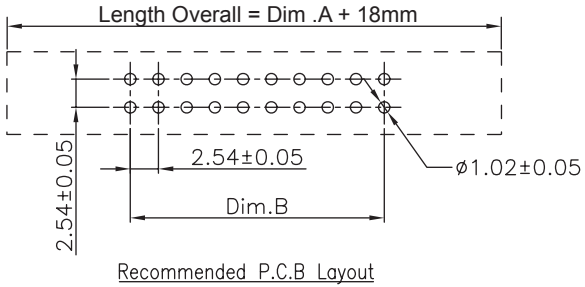

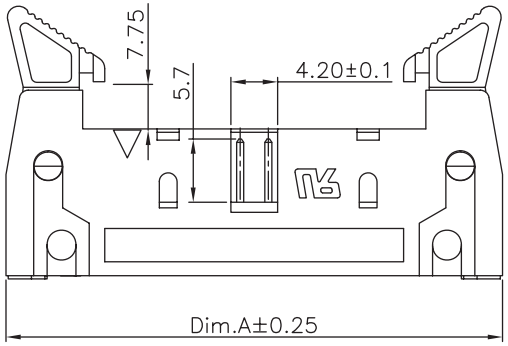

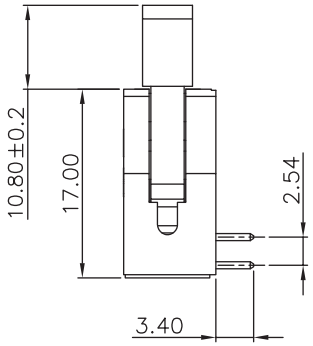

TECHNICAL CHARACTERISTICS

MATERIAL
INSULATOR: PBT
FLAMABILITY RATING: UL94-V0
COLOR: BLACK
CONTACT MATERIAL: COPPER ALLOY
CONTACT TYPE: STAMPED
CONTACT PLATING: GOLD
QUALITY CLASS: 3 AS PER CECC 75 301-802
PITCH: 2.54MM

ENVIRONMENTAL
OPERATING TEMPERATURE: -40 UP TO 125°C
COMPLIANCE: LEAD FREE AND ROHS

ELECTRICAL
CURRENT RATING: 3A MAX
WORKING VOLTAGE: 250V AC
INSULATOR RESISTANCE: >1000 MOHM
DIELECTRIC WITHSTANDING VOLTAGE: 500V AC/MN
CONTACT RESISTANCE: 20 mOHM MAX

STANDARD
CERTIFIED: E323964 / MODEL NUMBER 612-R

SOLDERING
WAVE PROCESS ONLY

PACKAGING
TRAY

DIMENSION

No. of Positions	Dim A	Dim B	No. of Positions	Dim A	Dim B
10	32.00	10.16	34	62.50	40.64
12	34.54	12.70	40	70.10	48.26
14	37.08	15.24	50	82.85	60.96
16	39.62	17.78	60	95.50	73.66
20	44.70	22.86			
24	49.78	27.94			
26	52.30	30.48			
30	57.40	35.56			

Notes:
No. of Positions 64 with three key; Other positions with one key

RoHS Compliant

REV	DATE	FILE	BY
G	22-FEB-13	OVERWALL DIM	QL
F	07-MAR-12	DRAWING	GG
E	15-MAR-10	DELETE NOTES	JP
D	17-NOV-09	STANDARD	JP
C	19-MAY-09	NEW DRAW	JP
B	27-NOV-07	MODIFICATIONS	EC
H	19-MAR-13	NOTES	AR

PROJECTION:

APPROVAL: RJ

GENERAL TOLERANCE
.X = +/_ 0.2
.XX = +/_ 0.15

UNIT: MM
SCALE:
SHEET: 1/1
DRAW: MIKE

WÜRTH ELEKTRONIK

DESCRIPTION: 2.54MM MALE ANGLED BOX HEADER WITH LONG LEVER

WERI PART NO: 612 0xx 229 21

SIZE
A4