LINEARIZER
(PC programmable)

MODEL **M2XF2**

BEFORE USE ....

Thank you for choosing M-System. Before use, please check contents of the package you received as outlined below.
If you have any problems or questions with the product, please contact M-System's Sales Office or representatives.

■ PACKAGE INCLUDES:

Signal conditioner (body + base socket + input resistor)..... (1)

■ MODEL NO.

Confirm Model No. marking on the product to be exactly what you ordered.

■ INSTRUCTION MANUAL

This manual describes necessary points of caution when you use this product, including installation, connection and basic maintenance procedures.
To change I/O ranges, the JX Configurator Connection Kit (model: JXCON) is required. For detailed information, refer to the data sheet and instruction manual for the JXCON.

POINTS OF CAUTION

■ NONINCENDIVE APPROVAL OPTION

- This equipment is suitable for use in Class I, Div. 2, Groups A, B, C and D or Non-Hazardous Locations only.
- WARNING! Before You Remove the Unit from Its Base Socket or Mount It, Turn Off the Power Supply and Input Signal for Safety.
- WARNING! – Explosion Hazard –
  Substitution of Components May Impair Suitability for Class I, Div. 2.
- WARNING! – Explosion Hazard –
  Do Not Disconnect Equipment Unless Power Has Been Switched Off or The Area is Known To Be Non-Hazardous.
- The equipment was evaluated for use in the ambient temperature and relative humidity as mentioned in 'ENVIRONMENT' section.
- The input and output wiring must be in accordance with Class I, Div. 2 wiring methods and in accordance with the authority having jurisdiction for use in these hazardous locations.

■ CONFORMITY WITH EC DIRECTIVES OR UL

- This equipment is suitable for use in a Pollution Degree 2 environment and in Installation Category II, with the maximum operating voltage of 300V.
  Basic insulation is maintained between signal input and output. Prior to installation, check that the insulation class of this unit satisfies the system requirements.
- Altitude up to 2000 meters
- The equipment must be mounted inside a panel.
- Risk of Electrical Shock: The front cover of the panel is to be opened only by qualified service personnel.
- The equipment must be installed such that appropriate clearance and creepage distances are maintained to conform to CE/UL requirements. Failure to observe these requirements may invalidate the CE/UL conformance.

■ POWER INPUT RATING & OPERATIONAL RANGE

- Locate the power input rating marked on the product and confirm its operational range as indicated below:
  100 – 240V AC rating: 85 – 264V (90 – 264V for UL),
  47 – 66 Hz, approx. 3 – 5VA
  24V DC rating: 24V ±10%, approx. 2W
  110V DC rating: 85 – 150V (110V ±10% for UL), approx. 2W

■ WARNING!

- To protect very delicate components contained inside the unit against damage from static electricity, wear a grounded wrist strap when handling them. If you do not have one, touch both of your hands to a safely grounded object or to a metal object.
- Ensure that the power supply and input signal are switched off before you plug in or remove the unit.

■ ENVIRONMENT

- Indoor use
- When heavy dust or metal particles are present in the air, install the unit inside proper housing with sufficient ventilation.
- Do not install the unit where it is subjected to continuous vibration. Do not subject the unit to physical impact.
- Environmental temperature must be within -30 to +60°C (-22 to +140°F) with relative humidity within 30 to 90% RH in order to ensure adequate life span and operation.
- Be sure that the ventilation slits are not covered with cables, etc.

■ WIRING

- Do not install cables (power supply, input and output) close to noise sources (relay drive cable, high frequency line, etc.).
- Do not bind these cables together with those in which noises are present. Do not install them in the same duct.

■ AND ....

- The unit is designed to function as soon as power is supplied, however, a warm up for 20 minutes is required for satisfying complete performance described in the data sheet.

COMPONENT IDENTIFICATION

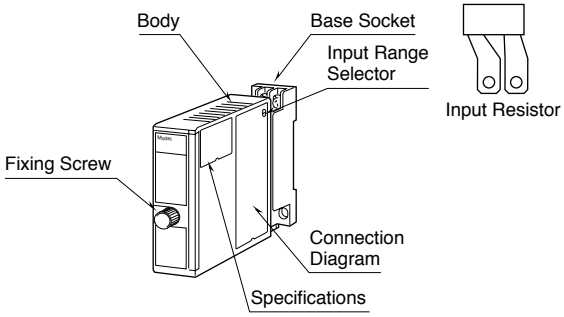

■ HOW TO OPEN THE LEFT SIDE COVER

Insert the tip of a minus driver into the openings indicated with arrows in the figure, and pull up the cover.

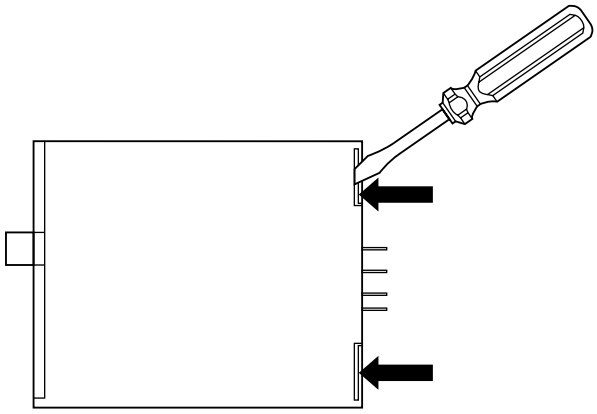

■ HOW TO CLOSE THE LEFT SIDE COVER

Place the side A first and push in the parts B, gently not to break the enclosure.

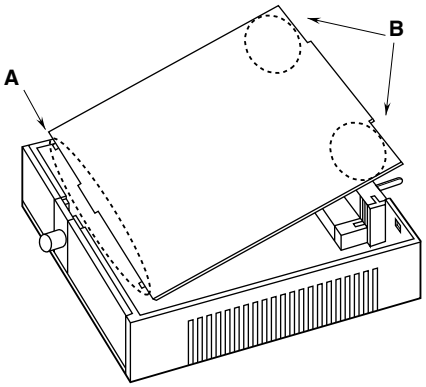

INSTALLATION

Loosen the fixing screw at the front of the unit in order to separate the body from the base socket.

■ DIN RAIL MOUNTING

Set the base socket so that its DIN rail adaptor is at the bottom. Position the upper hook at the rear side of base socket on the DIN rail and push in the lower. When removing the socket, push down the DIN rail adaptor utilizing a minus screwdriver and pull.

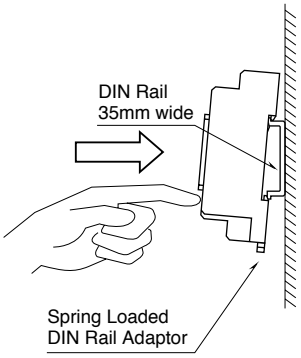

■ WALL MOUNTING

Refer to the drawings below.

TERMINAL CONNECTIONS

Connect the unit as in the diagram below or refer to the connection diagram on the side of the unit.
When an input resistor is provided with the module, attach it together with input wiring to the input screw terminals.

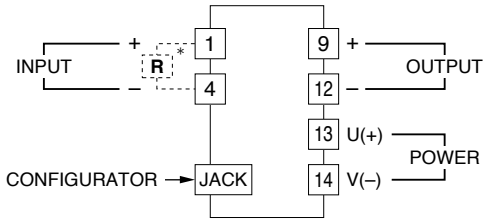

*Input shunt resistor attached for current input.

CHECKING

1) Terminal wiring: Check that all cables are correctly connected according to the connection diagram.
2) Input range selector: Check that the switch is at the appropriate position according to the input range model suffix code.
3) Output range selectors: Check that the switches are at the appropriate positions according to the output range model suffix code.
4) Power input voltage: Check voltage across the terminal 13 – 14 with a multimeter.
5) Input: Check that the input voltage is within 0 – 100% of full-scale.
6) Output: Check that the load resistance meets the described specifications.
7) Status indicator LED: Check that it flashes in a regular pattern.

ZERO/SPAN ADJUSTMENTS

This unit is calibrated at the factory to meet the ordered specifications, therefore you usually do not need any calibration.
For matching the signal to a receiving instrument or in case of regular calibration, fine zero and span adjustments can be done to ±5% by pressing UP/DOWN switches enabled with the zero/span selector switch. Calibrated values are stored in the non-volatile memory, which will not be lost even when you turn off power supply to the unit.
Zero and span are respectively set to 0% and 100% at the factory.

■ FRONT VIEW (with cover open)

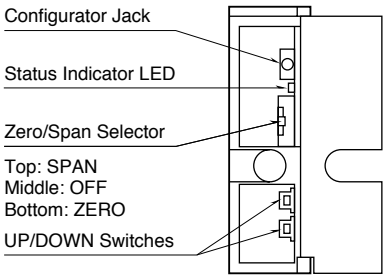

The front cover cannot be turned open by 180 deg. when there is no extra space between units.

Zero/Span Selector

ZERO: UP/DOWN switches usable for zero adjustment.
OFF: UP/DOWN switches unavailable.
SPAN: UP/DOWN switches usable for span adjustment.

UP/DOWN Switches

UP: Pressing UP increases adjusted values.
DOWN: Pressing DOWN decreases adjusted values.

■ HOW TO CALIBRATE THE ZERO

Slide the Zero/Span Selector to the bottom position and press UP or DOWN switch. Incrementing speed will be doubled when you keep pressing a switch.

■ HOW TO CALIBRATE THE SPAN

Slide the Zero/Span Selector to the top position and press UP or DOWN switch. Incrementing speed will be doubled when you keep pressing a switch.

■ HOW TO RESET

After you calibrated manually with these switches, you can reset them to its ex-factory state by pressing both UP/DOWN switches at once.

■ ADJUSTMENT PROCEDURE

Use a signal source and measuring instruments of sufficient accuracy level. Turn the power supply on and warm up for more than 20 minutes.

1) ZERO: Apply 0% input. Slide the Zero/Span Selector to the bottom position. Press UP or DOWN switch and adjust output to 0%.
2) SPAN: Apply 100% input Slide the Zero/Span Selector to the top position. Press UP or DOWN switch and adjust output to 100%.
3) Check ZERO adjustment again with 0% input.
4) The ZERO and SPAN adjustments are processed in a digital processor, and therefore they do not interact. However, if ZERO value is changed, repeat the above procedure 1) – 3).

I/O RANGE MODIFICATION

Configurator software is used to change input over the described range of the selected suffix code. For changing out of this range (between S1 and S2), set the Input Range Selector on the side of unit before software adjustment.
For a current input, set the Selector to the same setting as for S2 and use a receiving resistor.
Output ranges can be changed over the described range of the selected suffix code with the Configurator Software.
For changing out of this range, set the Output Range Selectors before software adjustment.

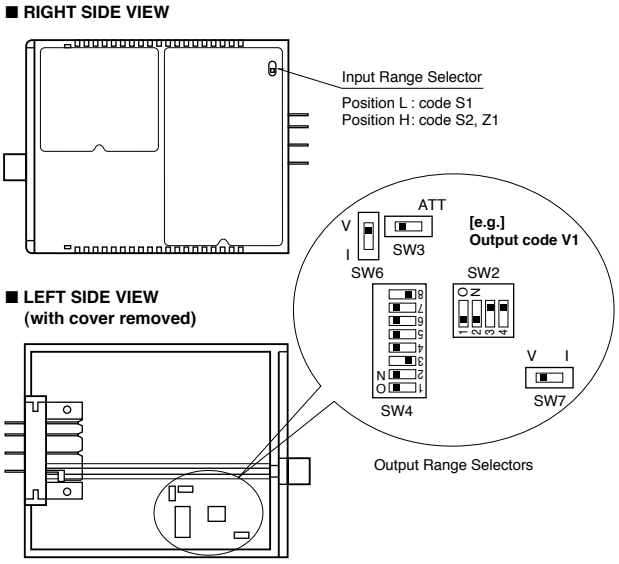

• Input range selector

CODE	USABLE RANGE	SETTING
S1	-1 to +1V DC	L
S2	-10 to +10V DC	H
Z1	0 to 50mA DC	H

• Output range selectors

	SW2				SW3
	1	2	3	4	
V1	OFF	OFF	ON	ON	Not ATT
V2	OFF	OFF	ON	ON	Not ATT
Z1	ON	ON	OFF	OFF	Not ATT

	SW4							
	1	2	3	4	5	6	7	8
V1	ON	ON	OFF	ON	ON	*	ON	OFF
V2	ON	OFF	ON	OFF	ON	*	ON	OFF
Z1	OFF	OFF	ON	OFF	OFF	OFF	OFF	OFF

	SW6		SW7	
	V	I	V	I
V1	ON	OFF	ON	OFF
V2	ON	OFF	ON	OFF
Z1	OFF	ON	OFF	ON

*ON/OFF position is irrelevant.

STATUS INDICATOR LED

The M2XF2 is provided with a status indicator LED which flashes in different patterns indicating various status of its CPU.
When it is functioning within normal parameters, the LED flashes in a regular pattern of ON and OFF.
When the unit is in an abnormality, it flashes in particular patterns repeating approximately in 1.3 seconds.
The following figure indicates typical patterns. A white circle means that the light is OFF for 80 millisec., while a black one means ON for 80 millisec.

●●○○●●○○●●○○●●○○
Running mode

●●●●●●●●○○○○○○○○
Program mode

●○●○●○○○○○○○○○○○○
Undefined functions

MAINTENANCE

Regular calibration procedure is explained below:

■ CALIBRATION

Warm up the unit for at least 20 minutes. Apply 0%, 25%, 50%, 75% and 100% input signal. Check that the output signal for the respective input signal remains within accuracy described in the data sheet. When the output is out of tolerance, recalibrate the unit according to the "ADJUSTMENT PROCEDURE" explained earlier.

EXTERNAL DIMENSIONS unit: mm (inch)

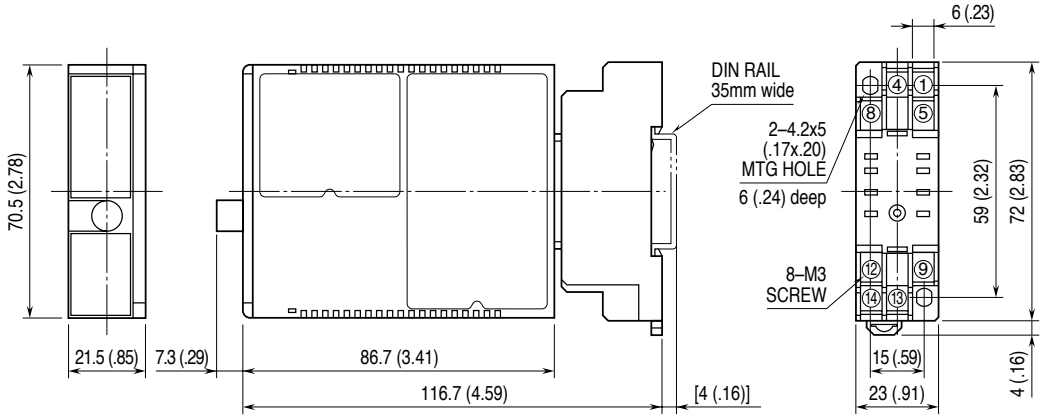

• When mounting, no extra space is needed between units.

■ TERMINAL ASSIGNMENTS

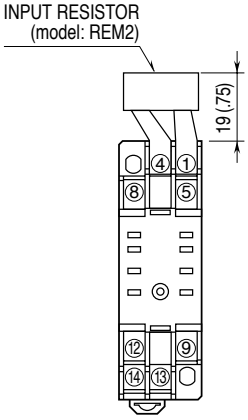

Input shunt resistor attached
for current input.

M-SYSTEM WARRANTY

M-System warrants such new M-System product which it manufactures to be free from defects in materials and workmanship during the 36-month period following the date that such product was originally purchased if such product has been used under normal operating conditions and properly maintained, M-System's sole liability, and purchaser's exclusive remedies, under this warranty are, at M-System's option, the repair, replacement or refund of the purchase price of any M-System product which is defective under the terms of this warranty. To submit a claim under this warranty, the purchaser must return, at its expense, the defective M-System product to the below address together with a copy of its original sales invoice.
THIS IS THE ONLY WARRANTY APPLICABLE TO M-SYSTEM PRODUCT AND IS IN LIEU OF ALL OTHER WARRANTIES, EXPRESS OR IMPLIED, INCLUDING ANY IMPLIED WARRANTIES OF MERCHANTABILITY OR FITNESS FOR A PARTICULAR PURPOSE. M-SYSTEM SHALL HAVE NO LIABILITY FOR CONSEQUENTIAL, INCIDENTAL OR SPECIAL DAMAGES OF ANY KIND WHATSOEVER.
M-System Co., Ltd., 5-2-55, Minamitsumori, Nishinari-ku, Osaka 557-0063 JAPAN, Phone: (06) 6659-8201, Fax: (06) 6659-8510, E-mail: info@m-system.co.jp