立得電子工業股份有限公司

SPECIFICATION FOR LED BACKLIGHT

PART NO. : **LP1063-RGB-S290**

VERSION. **B**

DATE. : **2005.03.31**

Approved by：_____

Checked by：_____

Prepared by：_____

LEDTECH ELECTRONICS CORPORATION

NANYA ROAD, MUGANG, ZHAOQING CITY

GUANGDONG CHINA.

TEL:86-758-2875541,2870651,2877464,2876185,2877017

FAX:86-758-2878014

Http:www.ledtech.com.tw

◆Features

Free Design.
High Brightness.
Longer Life And Low Power Consumption.
Various Color: Yellow Green , Amber , Red , Orange , Green ,Blue…
Dimensions:41.7x18.3x2.2(mm)
View Area:30.5x14.1(mm)

◆Radiative Sort

- [ ] Bottom Backlight
- [V] Edge Backlight

◆Chip Material:

- [ ] GaP
- [ ] AlGaInP
- [V] InGaN
- [V] GaAlAs

◆Applications

LCD Backlight
Meterpanel Backlight
PDA
Mobile Phone

◆Chip Emitting Color:

R&G&B

◆Absolute Maximum Rating

Parameter	Symbol	Rating	Unit	Remark
Forward Current	If	25	mA	PER LED
Reverse Voltage	VR	5	V	IR=10uA
Power Dissipation	PD	300	mW	
Operating Temperature	Topr	-20 ~ +70	℃	
Storage Temperature	Tsto	-30 ~ +80	℃	
The Temperature Of Soldering	Tsol	260	℃	5 sec.

◆Dimensions:

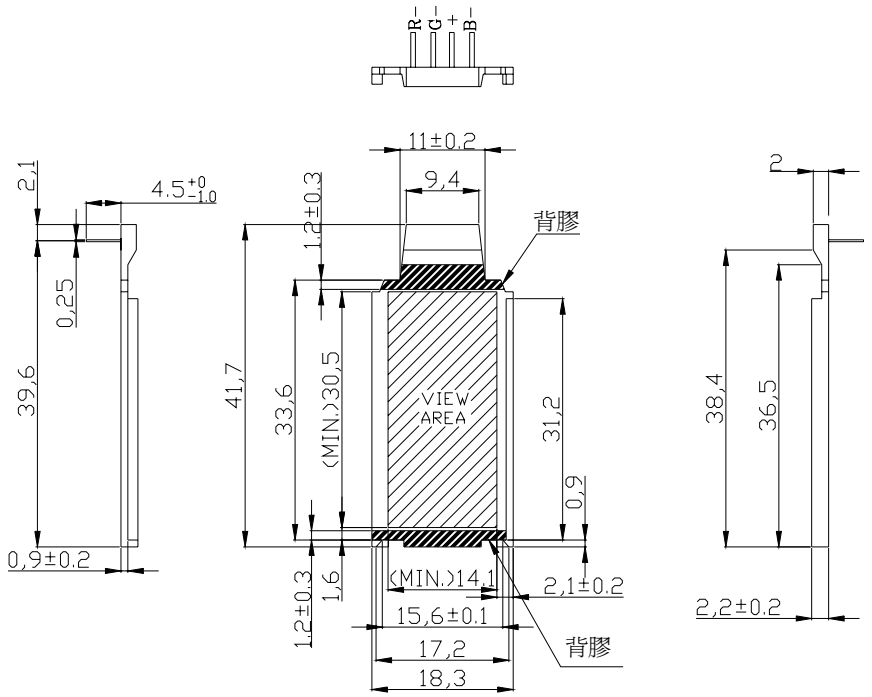

A:ANODE / K:CATHODE / V.A:30.5×14.1(mm)

◆Notes:

All dimensions are in millimeters.

Tolerance is ±0.25mm unless otherwise noted.

◆Circuit Diagram

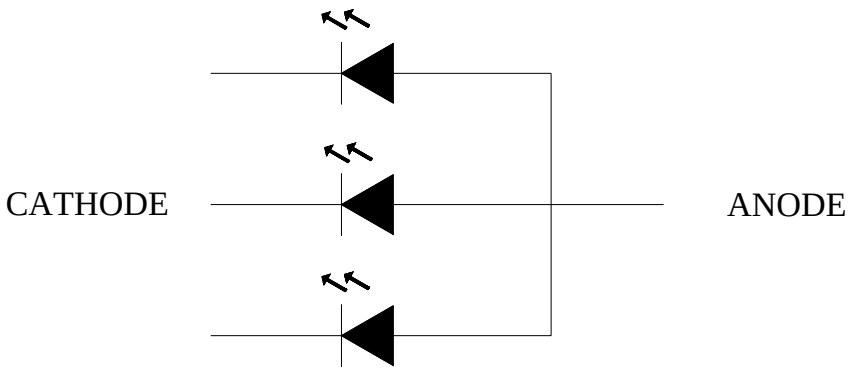

◆Electro/Optical Characteristics(at Ta=25℃)

Parameter	Symbol	Test Condition	Rating				Unit	Remark
			COLOR	Min.	Typ.	Max.		
Forward Voltage	Vf	If=20mA per led	R	-	1.9	2.4	V	★1
			G	-	3.1	4.0		
			B	-	3.2	4.0		
Luminous Intensity	Iv	If=20mA per led	R	17	24	48	cd/㎡	★2
			G	48	78	124		
			B	18	26	52		
Luminous Uniformity	-	If=20mA per led	R	70	-	-	%	★2,★3
			G	70	-	-		
			B	70	-	-		
Emission Wavelength	λd	If=20mA per led	R	635	640	645	nm	
			G	520	525	530		
			B	460	465	470		
Spectral Line Half Width	Δλ	If=20mA per led	R	-	20	-	nm	
			G	-	35	-		
			B	-	26	-		
Chromaticity Coordinates	X	If=20mA per led	-	-	-	-	-	
	Y			-	-	-		

Remark

★1.Testing Method

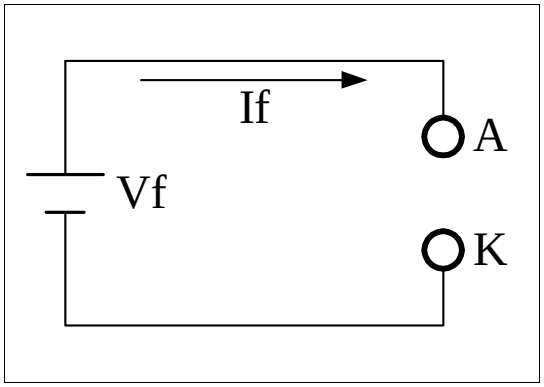

★2.Measured Method

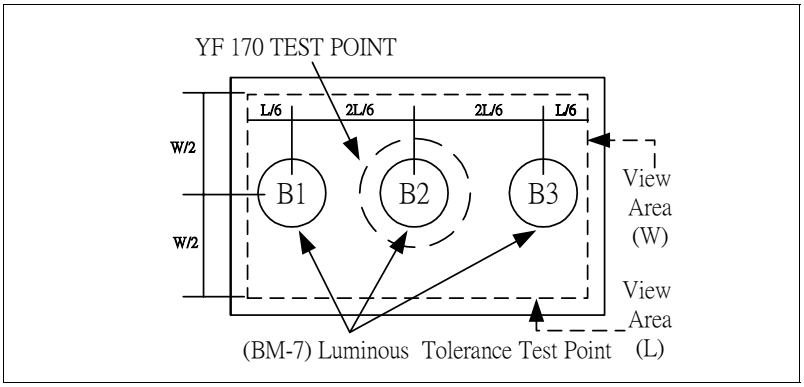

(1) The test equipment is "TOPCON"BM-7 . Field (θ) ☐ =2° ☐V 1° ☐ 2°

(2)The "TOPCON"BM-7 test position of luminous intensity is B1~B3.

★3. The"TOPCON"BM-7 test

$$\text{Position of luminous Uniformity} = \left[\frac{B(MIN.)}{B(MAX.)} \right] \times 100\%$$

◆Package methods:

During shipment and storage，the methods must not affect the product's quality。

●Inner package: ☐ Antistatic sponge ☑ PVC Box

●Outer package: Hard paper box。

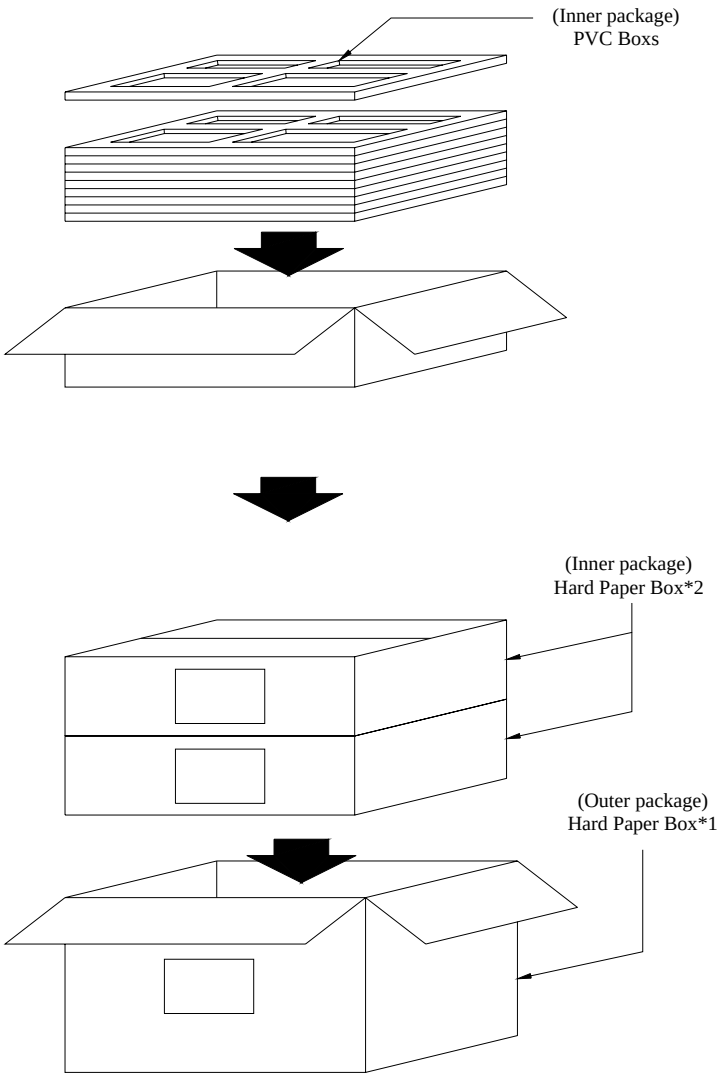

Project Changes

Date	Content
2005/03/31	將亮度最大值由 124cd/m^2改爲 200 cd/m^2。回收 A 版發行 B 版