REV.	DATE	DESCRIPTION
NC	01/19/01	INITIAL RELEASE

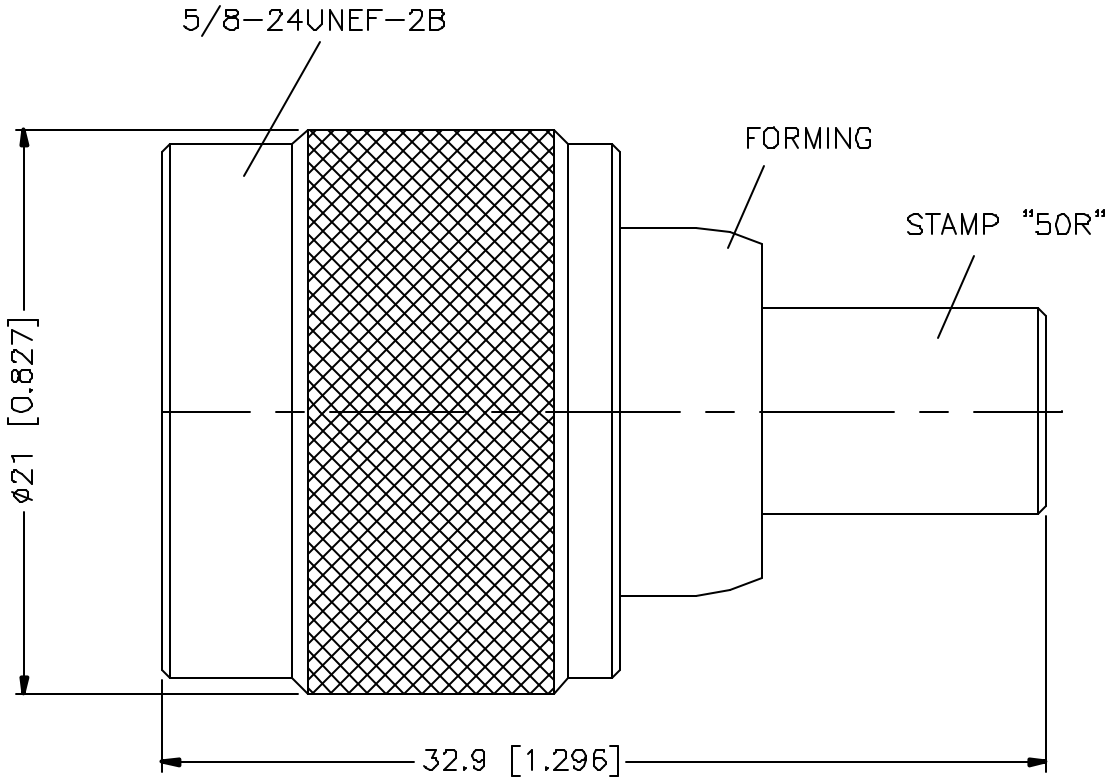

NOTE:

RESISTOR TOLERANCE
50 ohm 5%-1 WATT

	DESCRIPTION	MATERIAL	FINISH
1	BODY	BRASS	NICKEL
2	INSULATOR	TEFLON	NATURAL
3	CONTACT PIN	BRASS	GOLD
4			
5			
6			
7			
8			

UNLESS OTHERWISE SPECIFIED DIMENSIONS ARE IN MILLIMETERS

DIMENSIONS IN [ ] ARE IN INCHES FOR CUSTOMER REFERANCE ONLY

UNLESS OTHERWISE SPECIFIED TOLERANCES FOR MILLIMETERS ARE:

0.5-6 = ± 0.2
6-30 = ± 0.4
30-120 = ± 0.6
120-315 = ± 1
315-1000 = ± 1.6
1000-2000 = ± 2.4

DO NOT SCALE DRAWING

APPROVALS		DATE
DRAWN	G.R.S.	01/19/01
CHECKED		
ISSUED		

Connex Connector Corporation

TITLE: N TERMINATOR PLUG - 50ohms

SIZE	FSCM NO.	DWG. NO.	REV.
A	99001	202109.DWG	NC

SCALE	PART NO.	SHEET
NA	202109	1 OF 1