REV.	DATE	DESCRIPTION
A	02/18/03	UPDATE DRAWING FORMAT
B	02/20/05	UPDATE PART DESCRIPTION

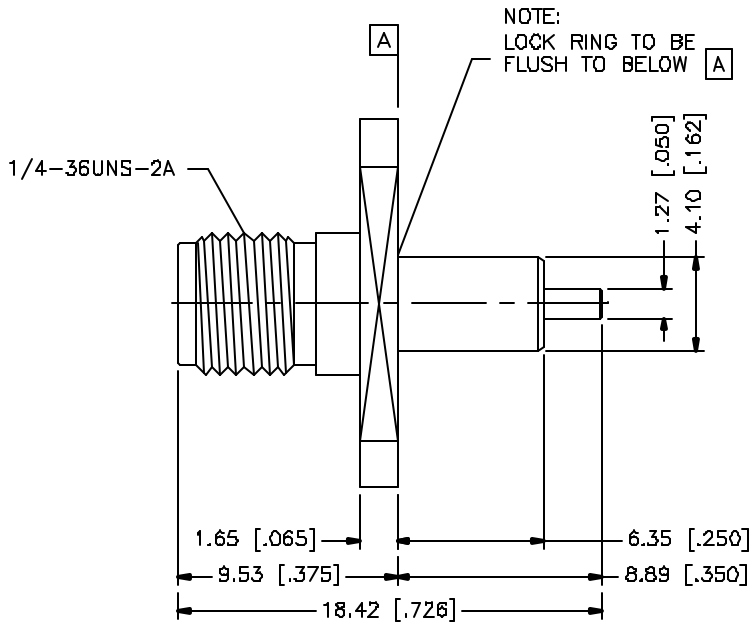

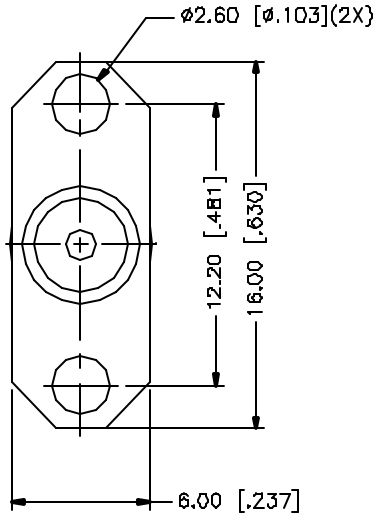

	DESCRIPTION	MATERIAL	FINISH	QTY
8				
7				
6				
5				
4	RING	BRASS	GOLD	1
3	CONTACT PIN	BER. COPPER	GOLD	1
2	INSULATOR	TEFLON	NATURAL	1
1	BODY	BRASS	GOLD	1

UNLESS OTHERWISE SPECIFIED DIMENSIONS ARE IN MILLIMETERS. DIMENSIONS IN [ ] ARE IN INCHES AND FOR CUSTOMER REFERENCE ONLY.

UNLESS OTHERWISE SPECIFIED TOLERANCES FOR MILLIMETERS ARE:
0.5 – 6mm ± 0.20mm
6 – 30mm ± 0.40mm
30 – 120mm ± 0.60mm

UNLESS OTHERWISE SPECIFIED TOLERANCES FOR INCHES ARE:
.020 – .315 = ± 0.007"
.315 – 1.180 = ± 0.015"
1.180 – 4.724 = ± 0.020"

DO NOT SCALE DRAWING

APPROVALS		DATE
DRAWN	G.R.S.	02/20/05
CHECKED		
ISSUED		
SHEET	1 OF 1	

CAD FILE C:/132/132147-29.DWG

Amphenol Connex

PART DESCRIPTION
SMA PANEL RECEPTACLE – 2 HOLE
EXT. TEFLON .250 [6.35] – .350 [8.89]

PART NO. 132147-29

DWG. NO. 132147-29.DWG | REV. B | SIZE A | SCALE NA