Three Phase Rectifier Bridge Slim Version

Preliminary Data Sheet

PSBS 83

I_{dAV} = 88 A
V_{RRM} = 800-1800V

V_{RSM} V_{DSM} (V)	V_{RRM} V_{DRM} (V)	Type
800	800	PSBS 83/08
1200	1200	PSBS 83/12
1400	1400	PSBS 83/14
1600	1600	PSBS 83/16
1800	1800	PSBS 83/18

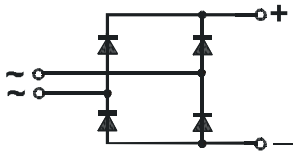

- Low profile (overall height: 17 mm)
- Package with screw terminals
- Isolation voltage 3000 V~
- Planar glass passivated chips
- Blocking voltage up to 1800 V
- Low forward voltage drop
- UL release applied, RoHS conform

Applications

- Supplies for DC power equipment
- Input rectifier for PWM inverter
- Battery DC power supplies
- Field supply for DC motors
- etc.

Advantages

- Easy to mount with two screws
- Space and weight savings
- Improved temperature and power cycling capability

Symbol	Test Conditions			Maximum Ratings	
I_{dAVM}	T_C = 100 °C,	(per module)		88	A
I_{FSM}	T_{VJ} = 45 °C	t = 10 ms	(50 Hz), sine	1200	A
	V_R = 0	t = 8.3 ms	(60 Hz), sine	1300	A
	T_{VJ} = T_{VJM}	t = 10 ms	(50 Hz), sine	1000	A
	V_R = 0	t = 8.3 ms	(60 Hz), sine	1100	A
$\int i^2 dt$	T_{VJ} = 45 °C	t = 10 ms	(50 Hz), sine	7200	A²s
	V_R = 0	t = 8.3 ms	(60 Hz), sine	7020	A²s
	T_{VJ} = T_{VJM}	t = 10 ms	(50 Hz), sine	5000	A²s
	V_R = 0	t = 8.3 ms	(60 Hz), sine	5020	A²s
T_{VJ}				-40... + 150	°C
T_{VJM}				150	°C
T_{stg}				-40... + 125	°C
V_{ISOL}	50/60 Hz, RMS	t = 1 min		2500	V~
	I_{ISOL} ≤ 1 mA	t = 1 s		3000	V~
M_d	Max. mounting torque		(M5)	5	Nm
	Max. terminal connection torque		(M5)	5	Nm
Weight	typ.			120	g

Symbol	Test Conditions		Characteristic Value	
I_R	V_R = V_{RRM}, T_{VJ} = 25°C	≤	0.3	mA
	V_R = V_{RRM}, T_{VJ} = T_{VJM}	≤	5	mA
V_F	I_F = 100 A, T_{VJ} = 25 °C	≤	1.25	V
V_{TO}	For power-loss calculations only		0.8	V
r_T			5	mΩ
R_{thJC}	per diode; DC current		0.58	K/W
	per module		0.145	K/W
R_{thJK}	per diode; DC current		0.825	K/W
	per module		0.206	K/W
d_s	Creeping distance on surface		10.0	mm
d_A	Creeping distance in air		9.4	mm
a	Max. allowable acceleration		50	m/s²

Data according to IEC 60747 refer to a single diode unless otherwise stated

Package style and outline

Dimensions in mm (1mm = 0.0394")

Max. allowed screw-in depth: 8.5 mm

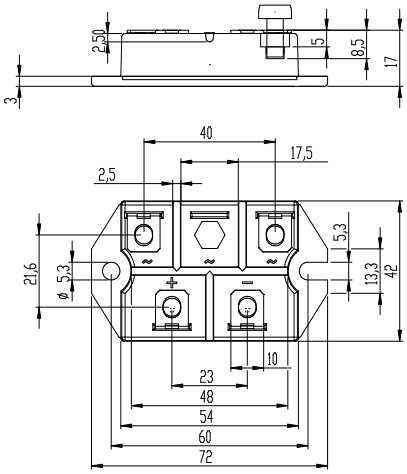

POWERSEM GmbH, Walpersdorfer Str. 53
D - 91126 Schwabach
Phone: 09122 - 9764 - 0 Email: info@powersem.de FAX: 09122 - 9764 - 20

© 2008 POWERSEM reserves the right to change limits, test conditions and dimensions

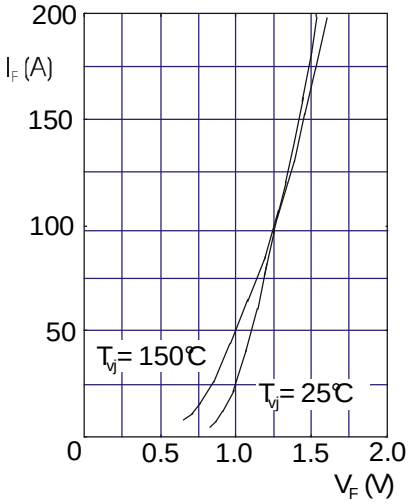

Forward current versus voltage drop per diode

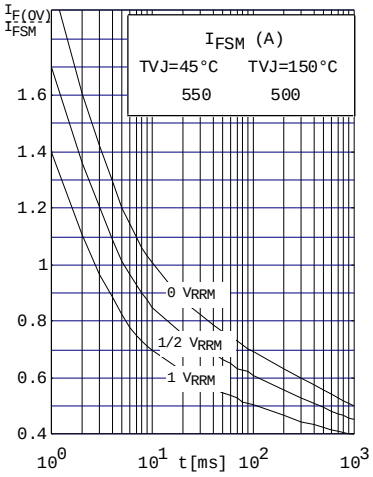

Surge overload current per diode
I_{FSM}: Crest value t: duration

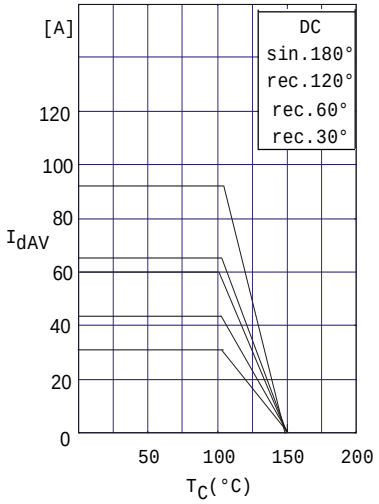

Maximum forward current at case temperature

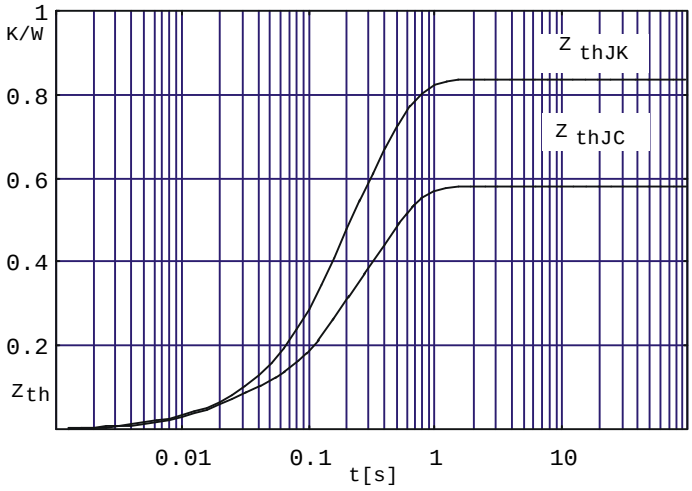

Transient thermal impedance per diode

POWERSEM GmbH, Walpersdorfer Str. 53
D - 91126 Schwabach
Phone: 09122 - 9764 - 0 Email: info@powersem.de FAX: 09122 - 9764 - 20
© 2008 POWERSEM reserves the right to change limits, test conditions and dimensions