**Freescale Semiconductor**
Technical Data

Document Number: MMRF1004N
Rev. 1, 1/2014

RoHS

# RF Power Field Effect Transistors

## N-Channel Enhancement-Mode Lateral MOSFETs

**MMRF1004NR1**
**MMRF1004GNR1**

Designed for Class A or Class AB general purpose applications with frequencies from 1600 to 2200 MHz. Suitable for analog and digital modulation and multipurpose amplifier applications.

- Typical Two-Tone Performance @ 2170 MHz: $V_{DD}$ = 28 Vdc, $I_{DQ}$ = 130 mA, $P_{out}$ = 10 W PEP
  - Power Gain — 15.5 dB
  - Drain Efficiency — 36%
  - IMD — -34 dBc
- Typical 2-Carrier W-CDMA Performance: $V_{DD}$ = 28 Vdc, $I_{DQ}$ = 130 mA, $P_{out}$ = 1 W Avg., Full Frequency Band (2130-2170 MHz), Channel Bandwidth = 3.84 MHz. PAR = 8.5 dB @ 0.01% Probability
  - Power Gain — 15.5 dB
  - Drain Efficiency — 15%
  - IM3 @ 10 MHz Offset — -47 dBc in 3.84 MHz Channel Bandwidth
  - ACPR @ 5 MHz Offset — -49 dBc in 3.84 MHz Channel Bandwidth
- Typical Single-Carrier N-CDMA Performance: $V_{DD}$ = 28 Vdc, $I_{DQ}$ = 130 mA, $P_{out}$ = 1 W Avg., Full Frequency Band (1930-1990 MHz), IS-95 (Pilot, Sync, Paging, Traffic Codes 8 through 13), Channel Bandwidth = 1.2288 MHz. PAR = 9.8 dB @ 0.01% Probability on CCDF.
  - Power Gain — 15.5 dB
  - Drain Efficiency — 16%
  - ACPR @ 885 kHz Offset = -60 dBc in 30 kHz Bandwidth
- Typical GSM EDGE Performance: $V_{DD}$ = 28 Vdc, $I_{DQ}$ = 130 mA, $P_{out}$ = 4 W Avg., Full Frequency Band (1805-1880 MHz)
  - Power Gain — 16 dB
  - Drain Efficiency — 33%
  - EVM — 1.3% rms
- Capable of Handling 5:1 VSWR, @ 28 Vdc, 2000 MHz, 10 W CW Output Power

**Features**

- Characterized with Series Equivalent Large-Signal Impedance Parameters
- Internally Matched for Ease of Use
- Qualified Up to a Maximum of 32 $V_{DD}$ Operation
- Integrated ESD Protection
- 225°C Capable Plastic Package
- In Tape and Reel. R1 Suffix = 500 Units, 24 mm Tape Width, 13-inch Reel.

**1600-2200 MHz, 10 W, 28 V**
**GSM, GSM EDGE**
**SINGLE N-CDMA**
**2 x W-CDMA**
**LATERAL N-CHANNEL**
**RF POWER MOSFETs**

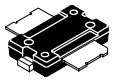

**TO-270-2**
**PLASTIC**
**MMRF1004NR1**

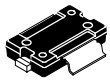

**TO-270G-2**
**PLASTIC**
**MMRF1004GNR1**

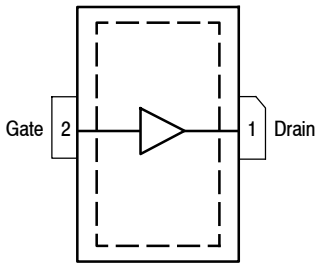


(Top View)

Note: The backside of the package is the source terminal for the transistor.

**Figure 1. Pin Connections**

© Freescale Semiconductor, Inc., 2013-2014. All rights reserved.

**Table 1. Maximum Ratings**

| Rating | Symbol | Value | Unit |
|---|---|---|---|
| Drain-Source Voltage | $V_{DSS}$ | -0.5, +68 | Vdc |
| Gate-Source Voltage | $V_{GS}$ | -0.5, +12 | Vdc |
| Storage Temperature Range | $T_{stg}$ | -65 to +150 | °C |
| Case Operating Temperature | $T_C$ | 150 | °C |
| Operating Junction Temperature (1) | $T_J$ | 225 | °C |

**Table 2. Thermal Characteristics**

| Characteristic | Symbol | Value (2) | Unit |
|---|---|---|---|
| Thermal Resistance, Junction to Case<br>Case Temperature 78°C, 1 W CW<br>Case Temperature 79°C, 10 W PEP, Two-Tone Test | $R_{\theta JC}$ | <br>2.3<br>2.9 | °C/W |

**Table 3. ESD Protection Characteristics**

| Test Methodology | Class |
|---|---|
| Human Body Model (per JESD22-A114) | 1A |
| Machine Model (per EIA/JESD22-A115) | A |
| Charge Device Model (per JESD22-C101) | IV |

**Table 4. Moisture Sensitivity Level**

| Test Methodology | Rating | Package Peak Temperature | Unit |
|---|---|---|---|
| Per JESD22-A113, IPC/JEDEC J-STD-020 | 3 | 260 | °C |

**Table 5. Electrical Characteristics** ($T_A$ = 25°C unless otherwise noted)

| Characteristic | Symbol | Min | Typ | Max | Unit |
|---|---|---|---|---|---|
| **Off Characteristics** | | | | | |
| Zero Gate Voltage Drain Leakage Current<br>($V_{DS}$ = 68 Vdc, $V_{GS}$ = 0 Vdc) | $I_{DSS}$ | — | — | 10 | μAdc |
| Zero Gate Voltage Drain Leakage Current<br>($V_{DS}$ = 28 Vdc, $V_{GS}$ = 0 Vdc) | $I_{DSS}$ | — | — | 1 | μAdc |
| Gate-Source Leakage Current<br>($V_{GS}$ = 5 Vdc, $V_{DS}$ = 0 Vdc) | $I_{GSS}$ | — | — | 500 | μAdc |
| **On Characteristics** | | | | | |
| Gate Threshold Voltage<br>($V_{DS}$ = 10 Vdc, $I_D$ = 40 μAdc) | $V_{GS(th)}$ | 1.5 | 2.2 | 3.5 | Vdc |
| Gate Quiescent Voltage<br>($V_{DD}$ = 28 Vdc, $I_D$ = 130 mAdc, Measured in Functional Test) | $V_{GS(Q)}$ | 2 | 2.8 | 4 | Vdc |
| Drain-Source On-Voltage<br>($V_{GS}$ = 10 Vdc, $I_D$ = 0.4 Adc) | $V_{DS(on)}$ | — | 0.33 | 0.4 | Vdc |
| **Dynamic Characteristics (4)** | | | | | |
| Output Capacitance<br>($V_{DS}$ = 28 Vdc ± 30 mV(rms)ac @ 1 MHz, $V_{GS}$ = 0 Vdc) | $C_{oss}$ | — | 20 | — | pF |
| Reverse Transfer Capacitance<br>($V_{DS}$ = 28 Vdc ± 30 mV(rms)ac @ 1 MHz, $V_{GS}$ = 0 Vdc) | $C_{rss}$ | — | 11.6 | — | pF |
| Input Capacitance<br>($V_{DS}$ = 28 Vdc, $V_{GS}$ = 0 Vdc ± 30 mV(rms)ac @ 1 MHz) | $C_{iss}$ | — | 120 | — | pF |

1. Continuous use at maximum temperature will affect MTTF.
2. Refer to AN1955, *Thermal Measurement Methodology of RF Power Amplifiers.* Go to http://www.freescale.com/rf. Select Documentation/Application Notes - AN1955.
3. Part internally matched on input.

(continued)

**Table 5. Electrical Characteristics** ($T_A$ = 25°C unless otherwise noted) **(continued)**

| Characteristic | Symbol | Min | Typ | Max | Unit |
|---|---|---|---|---|---|
| **Functional Tests** [1] (In Freescale Test Fixture, 50 ohm system) $V_{DD}$ = 28 Vdc, $I_{DQ}$ = 130 mA, $P_{out}$ = 10 W PEP, f1 = 2170 MHz, f2 = 2170.1 MHz, Two-Tone Test | | | | | |
| Power Gain | $G_{ps}$ | 14 | 15.5 | 17 | dB |
| Drain Efficiency | $\eta_D$ | 33 | 36 | — | % |
| Intermodulation Distortion | IMD | — | -34 | -28 | dBc |
| Input Return Loss | IRL | — | -15 | -9 | dB |
| **Typical 2-Carrier W-CDMA Performances** (In Freescale CDMA Test Fixture, 50 ohm system) $V_{DD}$ = 28 Vdc, $I_{DQ}$ = 130 mA, $P_{out}$ = 1 W Avg., f1 = 2112.5 MHz, f2 = 2122.5 MHz and f1 = 2157.5 MHz, f2 = 2167.5 MHz, 2-Carrier W-CDMA, 3.84 MHz Channel Bandwidth Carriers. ACPR measured in 3.84 MHz Channel Bandwidth @ ±5 MHz Offset. IM3 measured in 3.84 MHz Bandwidth @ ±10 MHz Offset. PAR = 8.5 dB @ 0.01% Probability on CCDF. | | | | | |
| Power Gain | $G_{ps}$ | — | 15.5 | — | dB |
| Drain Efficiency | $\eta_D$ | — | 15 | — | % |
| Gain Flatness in 30 MHz Bandwidth @ $P_{out}$ = 1 W CW | $G_F$ | — | 0.3 | — | dB |
| Intermodulation Distortion | IM3 | — | -47 | — | dBc |
| Adjacent Channel Power Ratio | ACPR | — | -49 | — | dBc |
| **Typical N-CDMA Performances** (In Freescale Test Fixture, 50 ohm system) $V_{DD}$ = 28 Vdc, $I_{DQ}$ = 130 mA, $P_{out}$ = 1 W Avg., 1930 MHz<Frequency<1990 MHz, Single-Carrier N-CDMA, 1.2288 MHz Channel Bandwidth Carrier. ACPR measured in 30 kHz Channel Bandwidth @ ±885 kHz Offset. PAR = 9.8 dB @ 0.01% Probability on CCDF | | | | | |
| Power Gain | $G_{ps}$ | — | 15.5 | — | dB |
| Drain Efficiency | $\eta_D$ | — | 16 | — | % |
| Gain Flatness in 30 MHz Bandwidth @ $P_{out}$ = 1 W CW | $G_F$ | — | 0.3 | — | dB |
| Adjacent Channel Power Ratio | ACPR | — | -60 | — | dBc |
| **Typical GSM EDGE Performances** (In Freescale GSM EDGE Test Fixture, 50 ohm system) $V_{DD}$ = 28 Vdc, $I_{DQ}$ = 130 mA, $P_{out}$ = 4 W Avg., 1805-1880 MHz, EDGE Modulation | | | | | |
| Power Gain | $G_{ps}$ | — | 16 | — | dB |
| Drain Efficiency | $\eta_D$ | — | 33 | — | % |
| Gain Flatness in 30 MHz Bandwidth @ $P_{out}$ = 4 W CW | $G_F$ | — | 0.3 | — | dB |
| Error Vector Magnitude | EVM | — | 1.3 | — | % rms |
| Spectral Regrowth at 400 kHz Offset | SR1 | — | -60 | — | dBc |
| Spectral Regrowth at 600 kHz Offset | SR2 | — | -70 | — | dBc |

1. Measurements made with device in straight lead configuration before any lead forming operation is applied. Lead forming is used for gull wing (GN) parts.

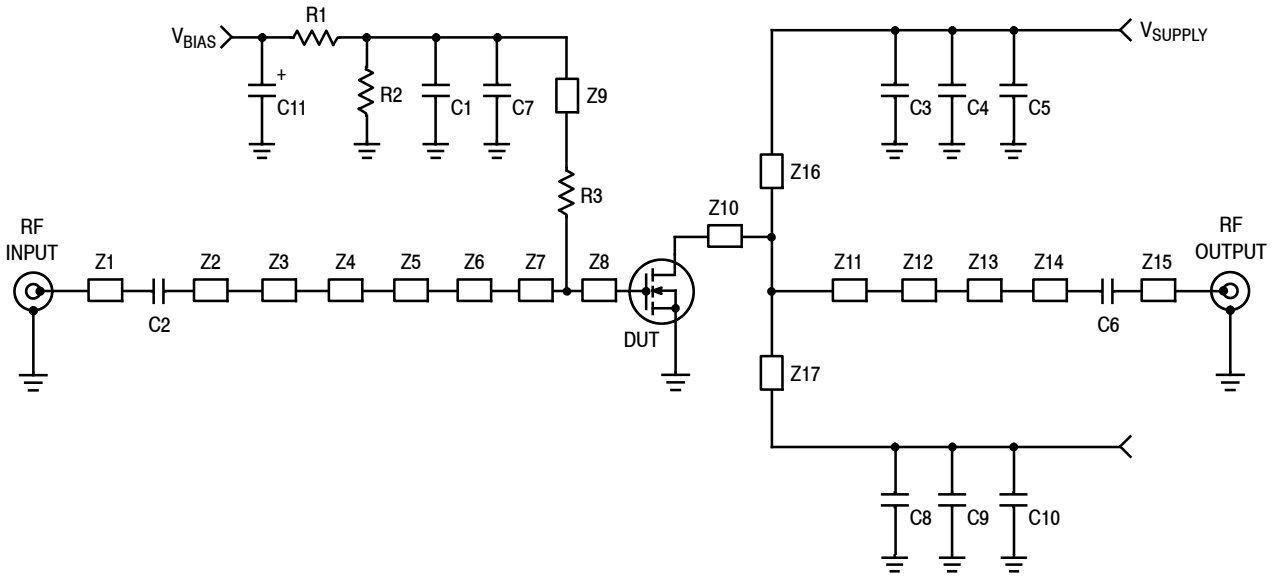


| | | | |
|---|---|---|---|
| Z1, Z15 | 0.066″ x 0.480″ Microstrip | Z10 | 0.930″ x 0.350″ Microstrip |
| Z2 | 0.066″ x 0.765″ Microstrip | Z11 | 0.930″ x 0.400″ Microstrip |
| Z3, Z5 | 0.066″ x 0.340″ x 0.050″ Taper | Z12 | 0.050″ x 0.105″ Microstrip |
| Z4 | 0.340″ x 0.295″ Microstrip | Z13 | 0.405″ x 0.242″ Microstrip |
| Z6 | 0.020″ x 0.060″ Microstrip | Z14 | 0.066″ x 0.740″ Microstrip |
| Z7 | 0.0905″ x 0.280″ Microstrip | Z16, Z17 | 0.050″ x 1.250″ Microstrip |
| Z8 | 0.0905″ x 0.330″ Microstrip | PCB | Taconic RF-35, 0.030″, $\varepsilon_r$ = 3.5 |
| Z9 | 0.050″ x 0.980″ Microstrip | | |

**Figure 2. MMRF1004NR1 Test Circuit Schematic — 2110-2170 MHz**

**Table 6. MMRF1004NR1 Test Circuit Component Designations and Values — 2110-2170 MHz**

| Part | Description | Part Number | Manufacturer |
|---|---|---|---|
| C1 | 100 nF Chip Capacitor | CDR33BX104AKYS | Kemet |
| C2, C6 | 4.7 pF Chip Capacitors | ATC100B4R7CT500XT | ATC |
| C3, C7, C8 | 9.1 pF Chip Capacitors | ATC100B9R1CT500XT | ATC |
| C4, C5, C9, C10 | 10 μF, 50 V Chip Capacitors | GRM55DR61H106KA88B | Murata |
| C11 | 10 μF, 35 V Tantalum Chip Capacitor | T490D106K035AT | Kemet |
| R1 | 1 kΩ, 1/4 W Chip Resistor | CRCW12061001FKEA | Vishay |
| R2 | 10 kΩ, 1/4 W Chip Resistor | CRCW12061002FKEA | Vishay |
| R3 | 10 Ω, 1/4 W Chip Resistor | CRCW120610R0FKEA | Vishay |

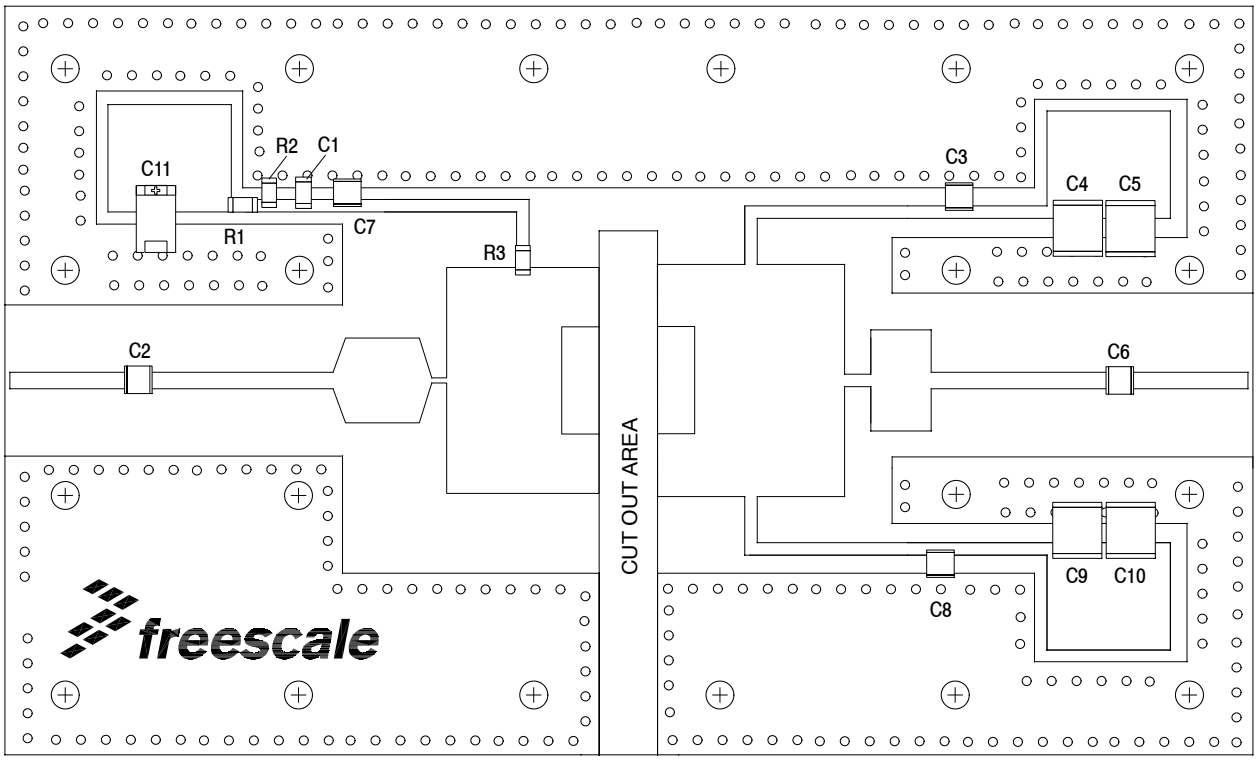


**Figure 3. MMRF1004NR1 Test Circuit Component Layout — 2110–2170 MHz**

## TYPICAL CHARACTERISTICS — 2110-2170 MHz

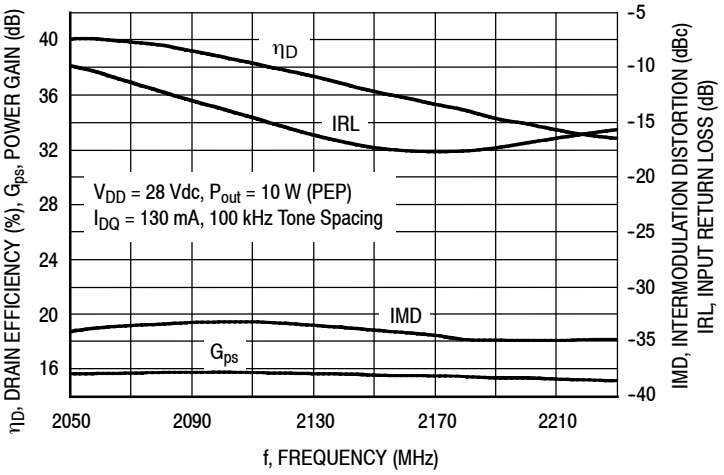


**Figure 4. Two-Tone Wideband Performance @ $P_{out}$ = 10 Watts (PEP)**

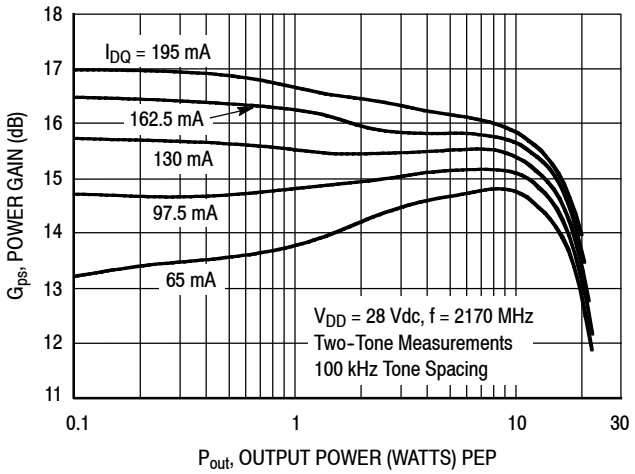


**Figure 5. Two-Tone Power Gain versus Output Power**

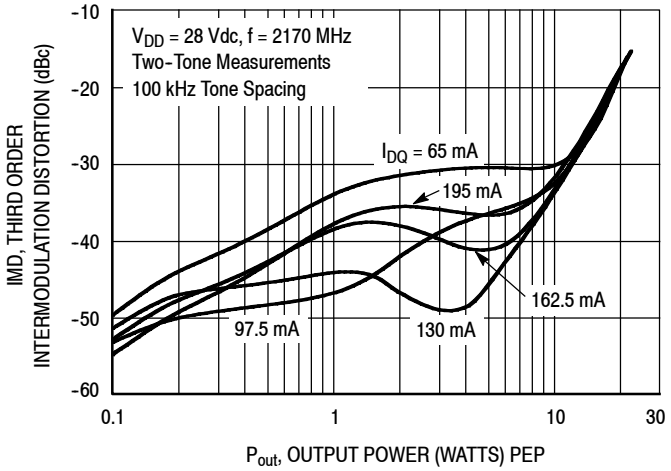


**Figure 6. Third Order Intermodulation Distortion versus Output Power**

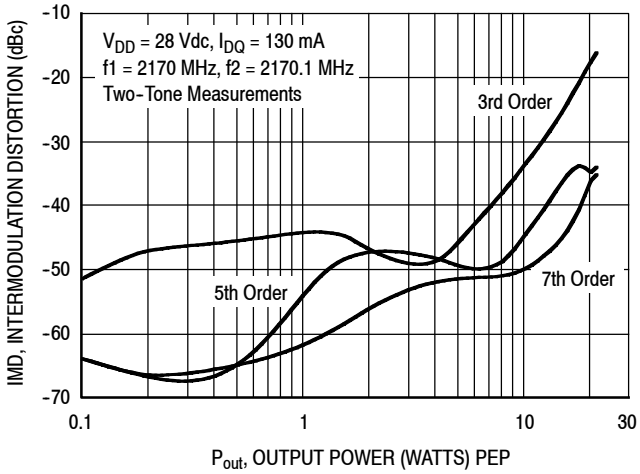


**Figure 7. Intermodulation Distortion Products versus Output Power**

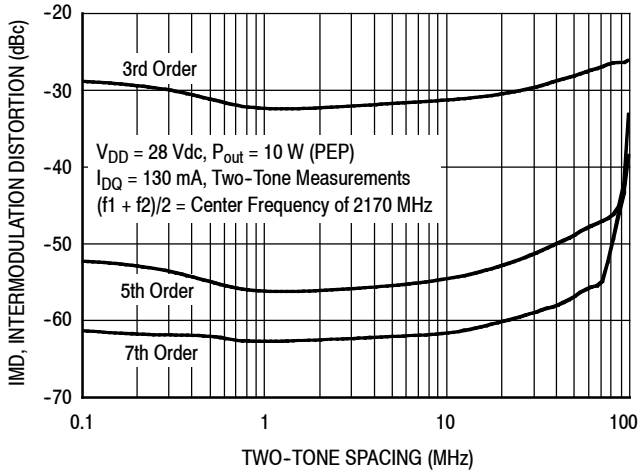


**Figure 8. Intermodulation Distortion Products versus Tone Spacing**

## TYPICAL CHARACTERISTICS — 2110-2170 MHz

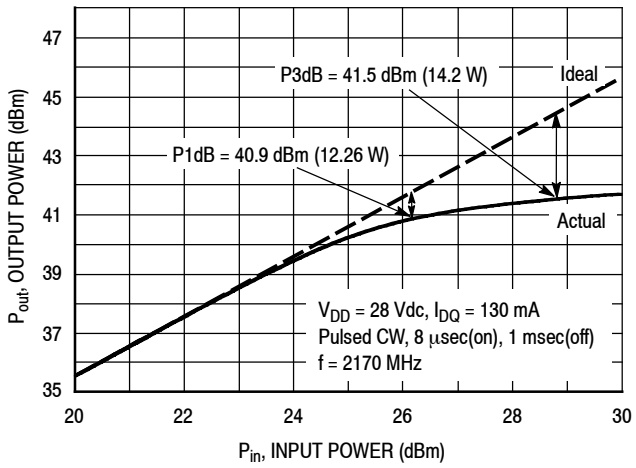


**Figure 9. Pulsed CW Output Power versus Input Power**

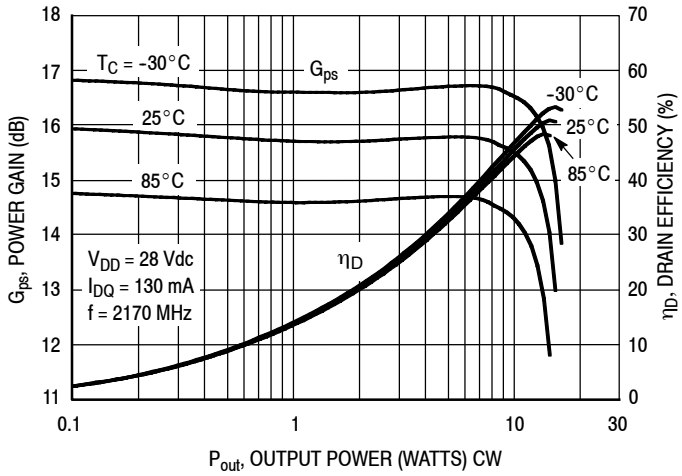


**Figure 10. Power Gain and Drain Efficiency versus CW Output Power**

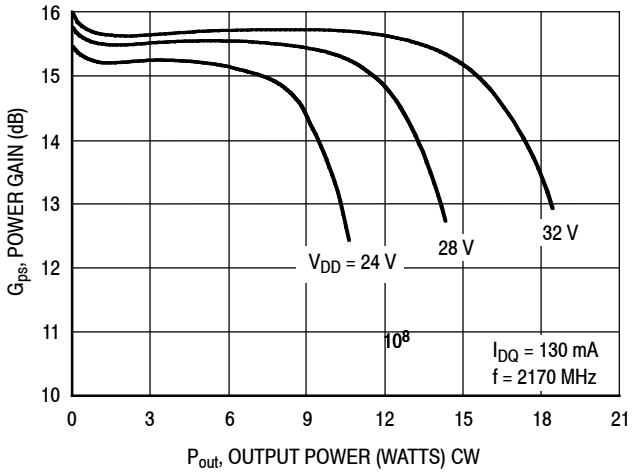


**Figure 11. Power Gain versus Output Power**

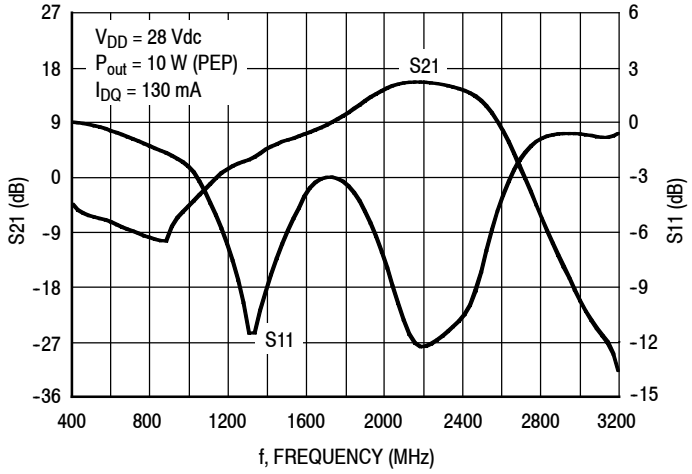


**Figure 12. Broadband Frequency Response**

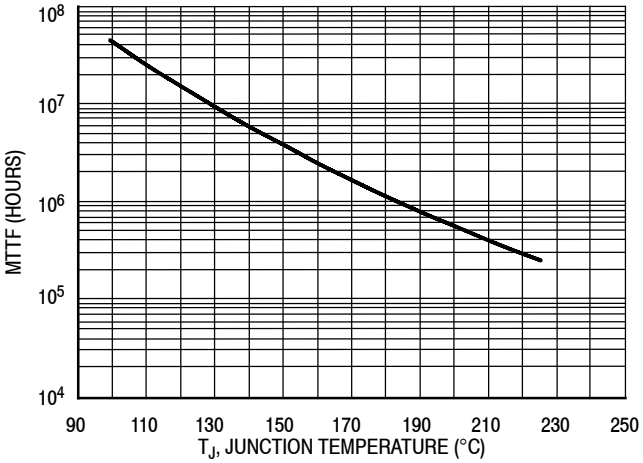


This above graph displays calculated MTTF in hours when the device is operated at $V_{DD}$ = 28 and $\eta_D$ = 47.2%.

MTTF calculator available at http://www.freescale.com/rf. Select Software & Tools/Development Tools/Calculators to access MTTF calculators by product.

**Figure 13. MTTF versus Junction Temperature — CW**

## W-CDMA TYPICAL CHARACTERISTICS — 2110-2170 MHz

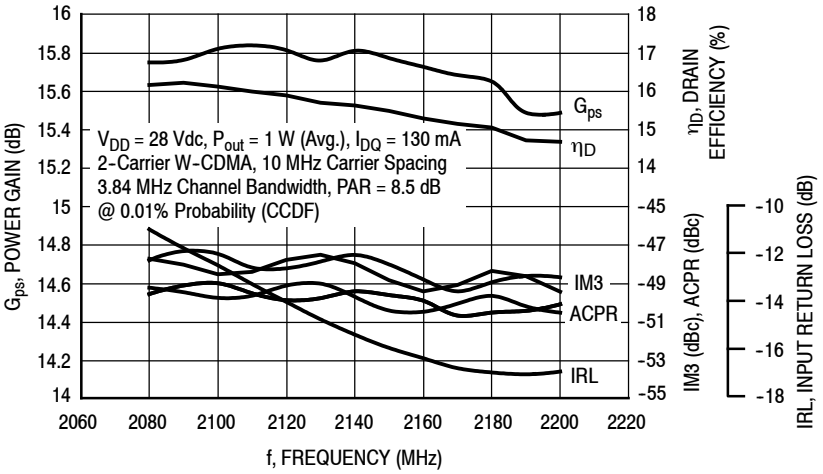


**Figure 14. 2-Carrier W-CDMA Broadband Performance @ $P_{out}$ = 1 Watt Avg.**

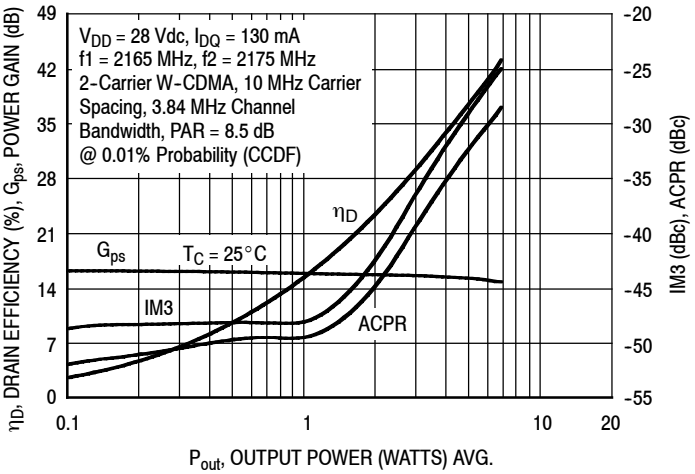


**Figure 15. 2-Carrier W-CDMA ACPR, IM3, Power Gain and Drain Efficiency versus Output Power**

## W-CDMA TEST SIGNAL

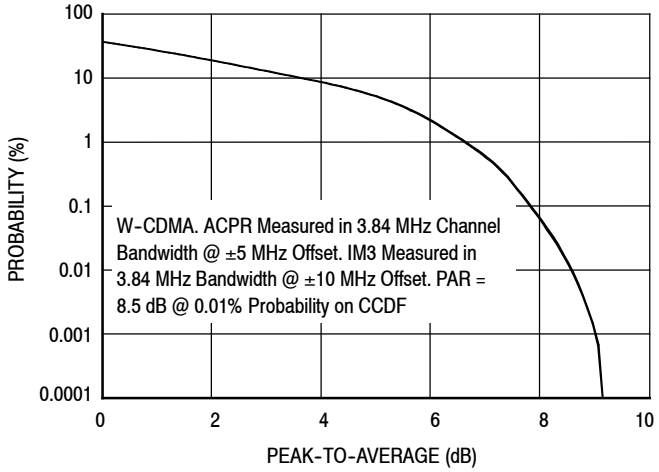


**Figure 16. CCDF W-CDMA 3GPP, Test Model 1, 64 DPCH, 67% Clipping, Single-Carrier Test Signal**

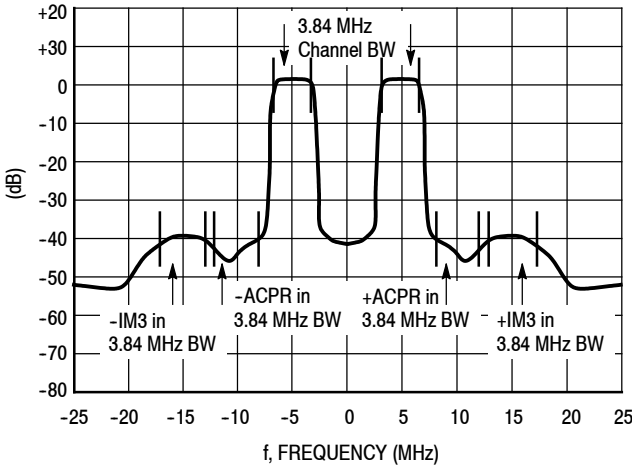


**Figure 17. 2-Carrier W-CDMA Spectrum**

## N-CDMA TYPICAL CHARACTERISTICS — 1930-1990 MHz

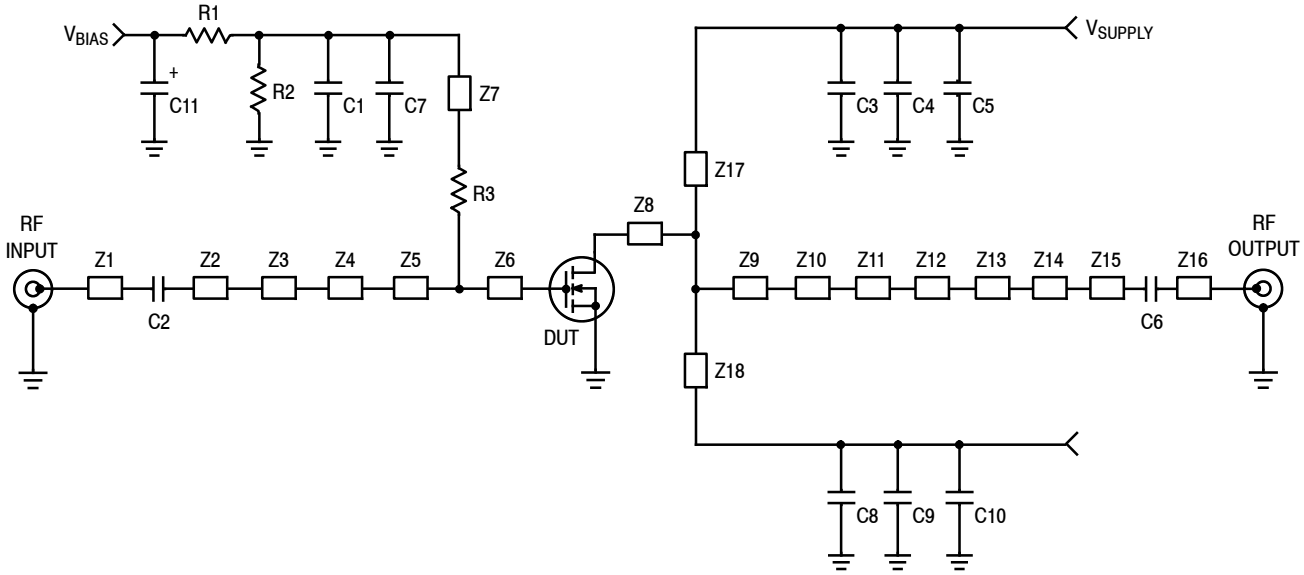


| | | | |
|---|---|---|---|
| Z1 | 0.066″ x 0.480″ Microstrip | Z11 | 0.244″ x 0.423″ Microstrip |
| Z2 | 0.066″ x 0.728″ Microstrip | Z12 | 0.244″ x 0.066″ x 0.089″ Taper |
| Z3 | 0.354″ x 0.512″ Microstrip | Z13 | 0.066″ x 0.182″ Microstrip |
| Z4 | 0.066″ x 0.079″ Microstrip | Z14 | 0.066″ x 0.263″ Microstrip |
| Z5, Z6 | 0.591″ x 0.335″ Microstrip | Z15 | 0.236″ x 0.118″ Microstrip |
| Z7 | 0.050″ x 0.980″ Microstrip | Z16 | 0.066″ x 0.099″ Microstrip |
| Z8 | 1.142″ x 0.350″ Microstrip | Z17, Z18 | 0.050″ x 1.250″ Microstrip |
| Z9 | 1.142″ x 0.516″ Microstrip | PCB | Taconic RF-35, 0.030″, $\varepsilon_r$ = 3.5 |
| Z10 | 0.433″ x 0.276″ Microstrip | | |

**Figure 18. MMRF1004NR1 Test Circuit Schematic — 1930-1990 MHz**

**Table 7. MMRF1004NR1 Test Circuit Component Designations and Values — 1930-1990 MHz**

| Part | Description | Part Number | Manufacturer |
|---|---|---|---|
| C1 | 100 nF Chip Capacitor | 12065C104KAT | AVX |
| C2, C6 | 4.7 pF Chip Capacitors | ATC100B4R7BT500XT | ATC |
| C3, C7, C8 | 9.1 pF Chip Capacitors | ATC100B9R1BT500XT | ATC |
| C4, C5, C9, C10 | 10 μF Chip Capacitors | C5750X5R1H106MT | TDK |
| C11 | 10 μF, 35 V Tantalum Chip Capacitor | TAJD106K035R | AVX |
| R1, R2 | 10 kΩ, 1/4 W Chip Resistors | CRCW12061002FKEA | Vishay |
| R3 | 10 Ω, 1/4 W Chip Resistor | CRCW120610R0FKEA | Vishay |

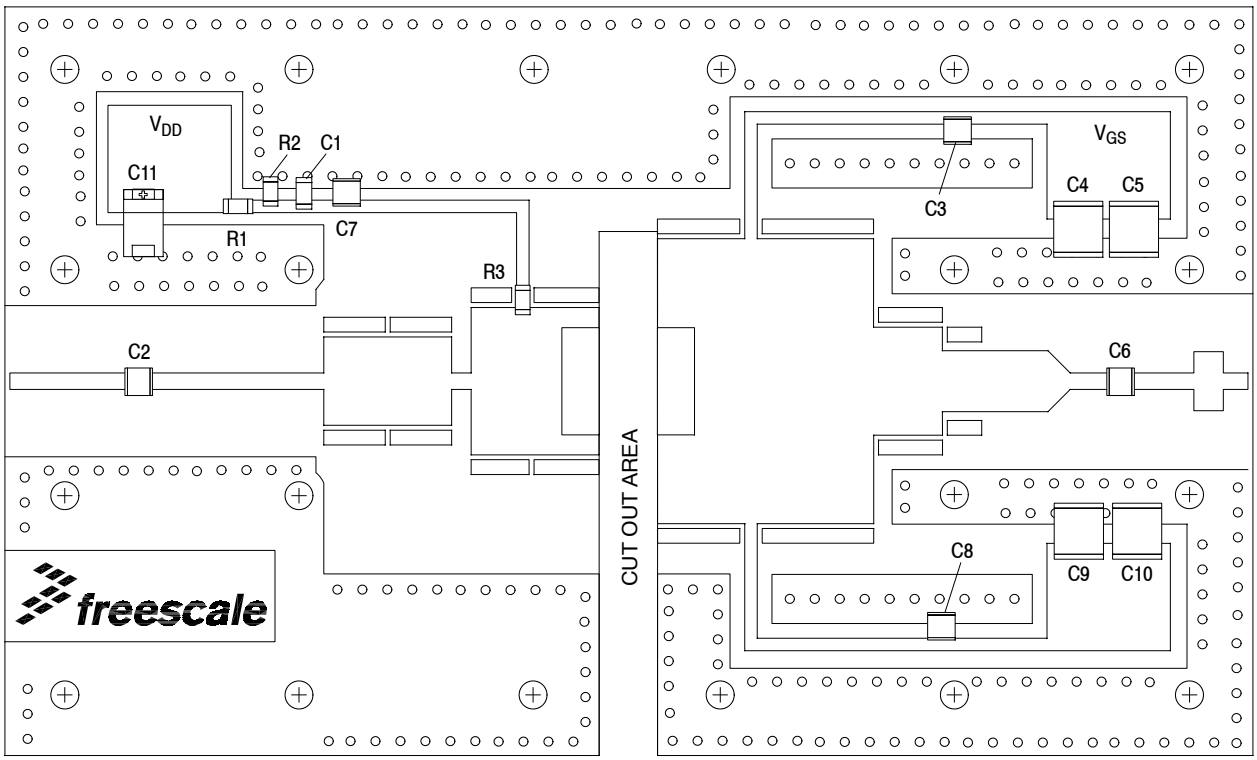


**Figure 19. MMRF1004NR1 Test Circuit Component Layout — 1930-1990 MHz**

## N-CDMA TYPICAL CHARACTERISTICS — 1930-1990 MHz

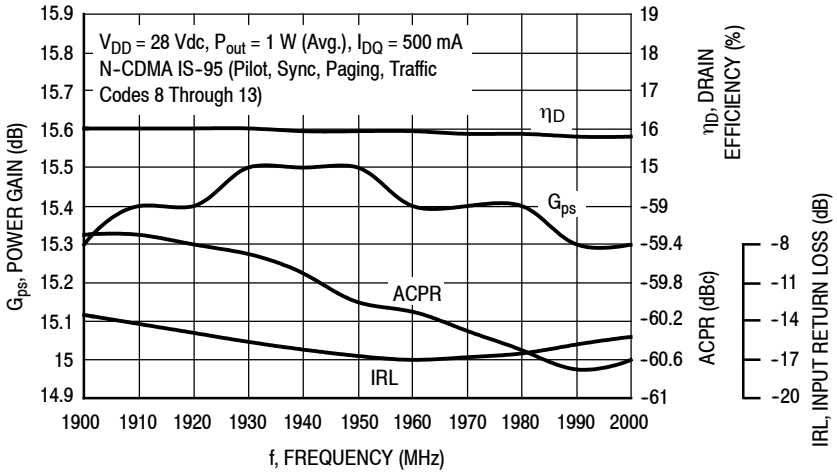


**Figure 20. Single-Carrier N-CDMA Broadband Performance @ $P_{out}$ = 1 Watt Avg.**

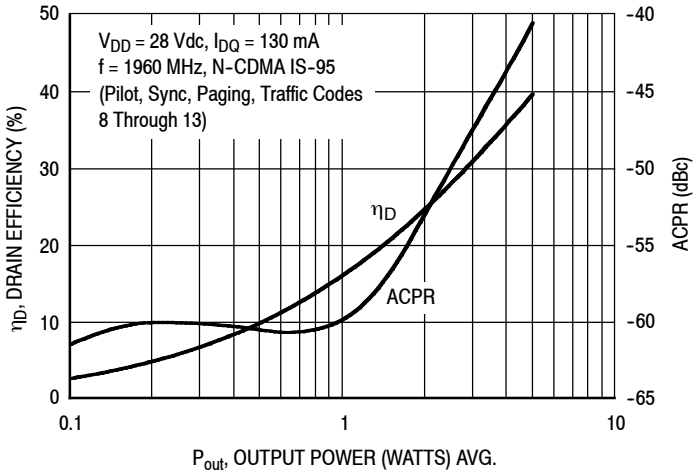


**Figure 21. Single-Carrier N-CDMA ACPR and Drain Efficiency versus Output Power**

## N-CDMA TEST SIGNAL

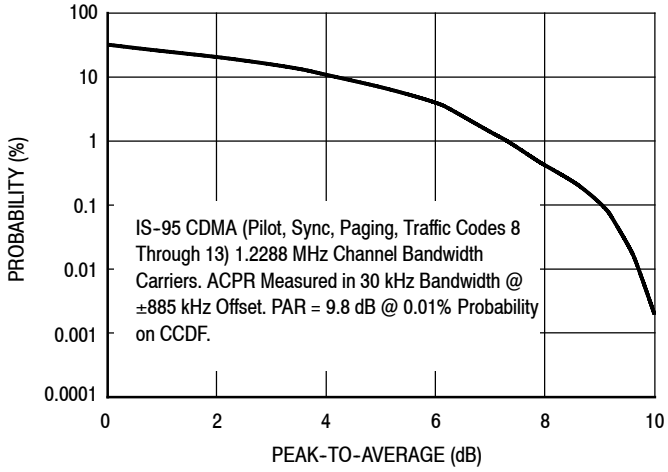


**Figure 22. Single-Carrier CCDF N-CDMA**

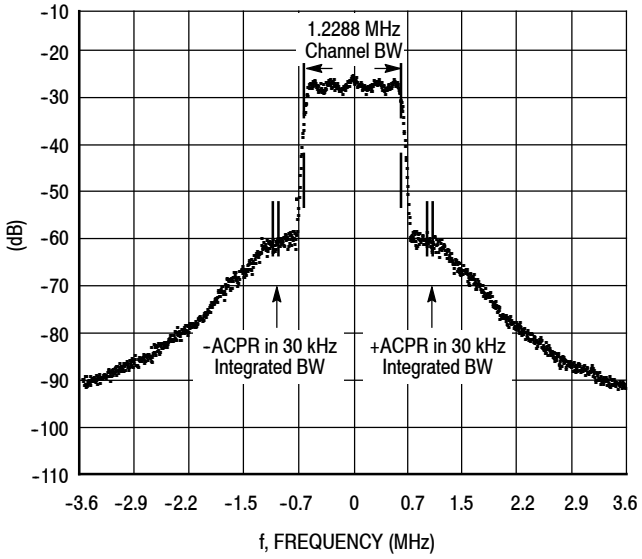


**Figure 23. Single-Carrier N-CDMA Spectrum**

## GSM EDGE TYPICAL CHARACTERISTICS — 1805-1880 MHz

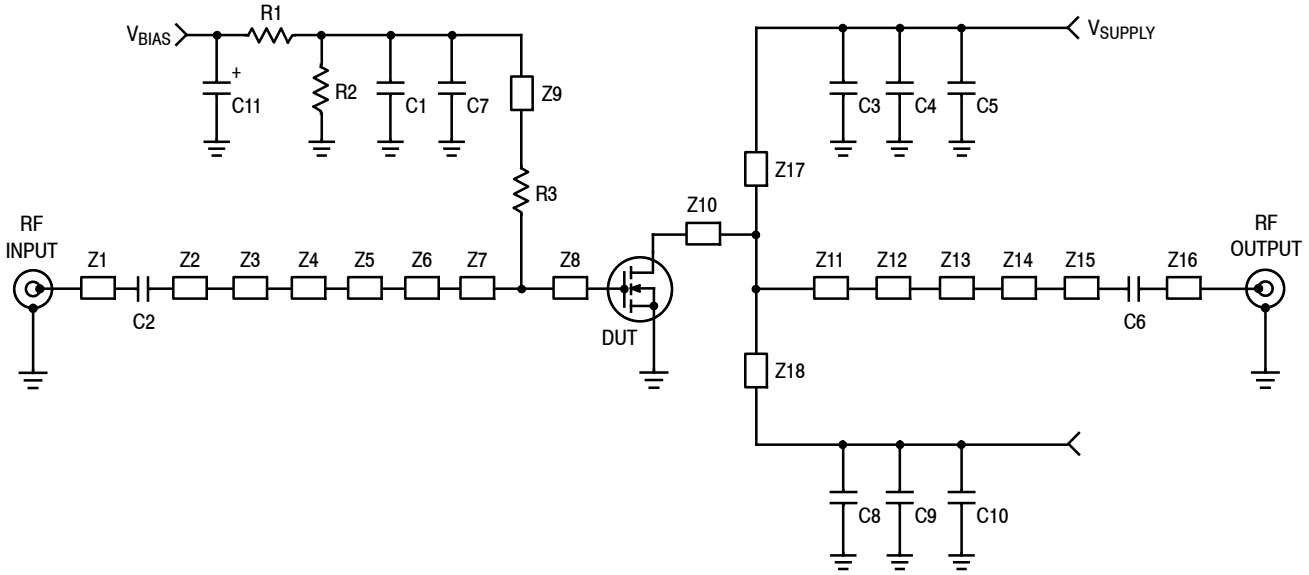


| | | | |
|---|---|---|---|
| Z1, Z16 | 0.066″ x 0.480″ Microstrip | Z10 | 1.142″ x 0.350″ Microstrip |
| Z2 | 0.066″ x 0.137″ Microstrip | Z11 | 1.142″ x 0.516″ Microstrip |
| Z3 | 0.236″ x 0.236″ Microstrip | Z12 | 0.433″ x 0.276″ Microstrip |
| Z4 | 0.066″ x 0.354″ Microstrip | Z13 | 0.276″ x 0.157″ Microstrip |
| Z5 | 0.551″ x 0.512″ Microstrip | Z14 | 0.236″ x 0.433″ Microstrip |
| Z6 | 0.066″ x 0.079″ Microstrip | Z15 | 0.066″ x 0.104″ Microstrip |
| Z7 | 0.591″ x 0.189″ Microstrip | Z17, Z18 | 0.050″ x 1.250″ Microstrip |
| Z8 | 0.591″ x 0.334″ Microstrip | PCB | Taconic RF-35, 0.030″, $\varepsilon_r$ = 3.5 |
| Z9 | 0.050″ x 0.980″ Microstrip | | |

**Figure 24. MMRF1004NR1 Test Circuit Schematic — 1805-1880 MHz**

**Table 8. MMRF1004NR1 Test Circuit Component Designations and Values —1805-1880 MHz**

| Part | Description | Part Number | Manufacturer |
|---|---|---|---|
| C1 | 100 nF Chip Capacitor | 12065C104KAT | AVX |
| C2, C6 | 4.7 pF Chip Capacitors | ATC100B4R7BT500XT | ATC |
| C3, C7, C8 | 9.1 pF Chip Capacitors | ATC100B9R1BT500XT | ATC |
| C4, C5, C9, C10 | 10 μF Chip Capacitors | C5750X5R1H106MT | TDK |
| C11 | 10 μF, 35 V Tantalum Chip Capacitor | TAJD106K035R | AVX |
| R1, R2 | 10 kΩ, 1/4 W Chip Resistors | CRCW12061001FKEA | Vishay |
| R3 | 10 Ω, 1/4 W Chip Resistor | CRCW120610R0FKEA | Vishay |

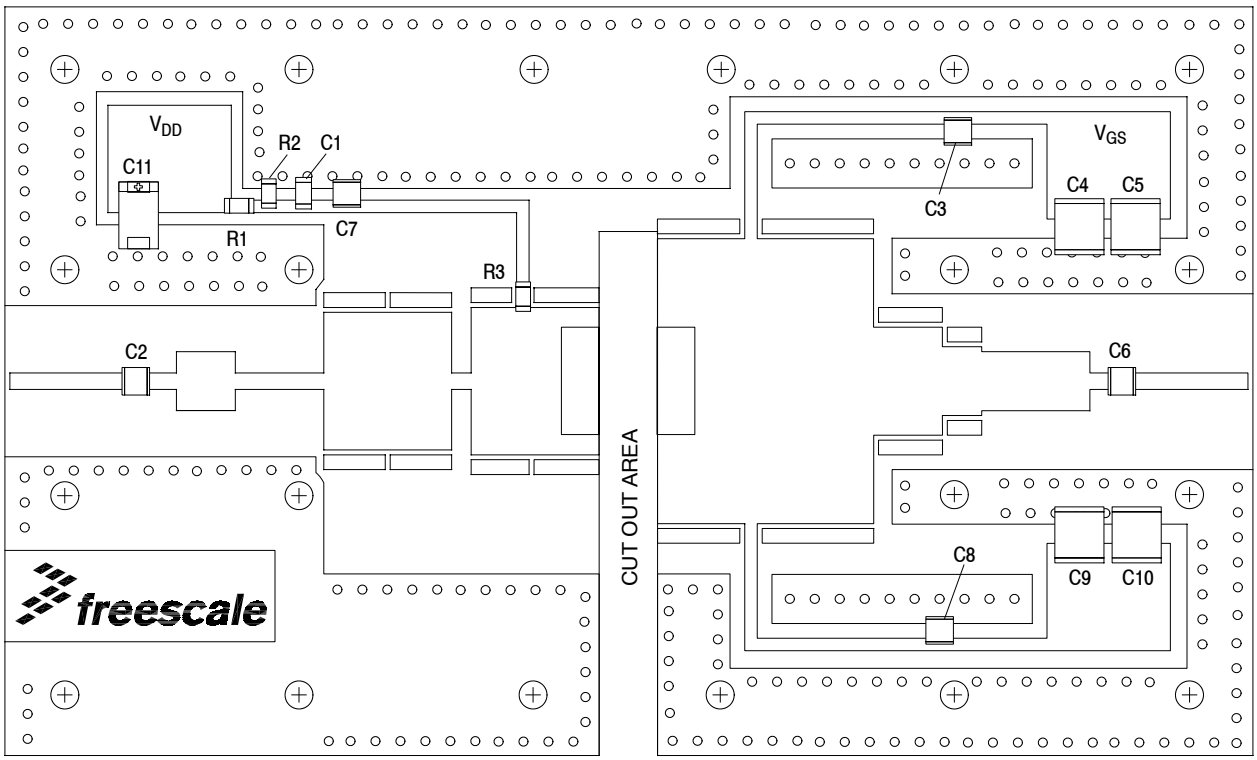


**Figure 25. MMRF1004NR1 Test Circuit Component Layout — 1805-1880 MHz**

## GSM EDGE TYPICAL CHARACTERISTICS — 1805-1880 MHz

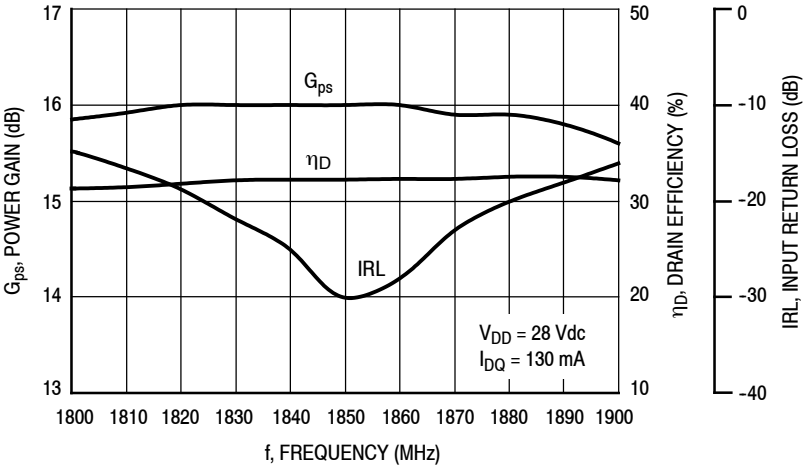


**Figure 26. Power Gain, Input Return Loss and Drain Efficiency versus Frequency @ $P_{out}$ = 4 Watts**

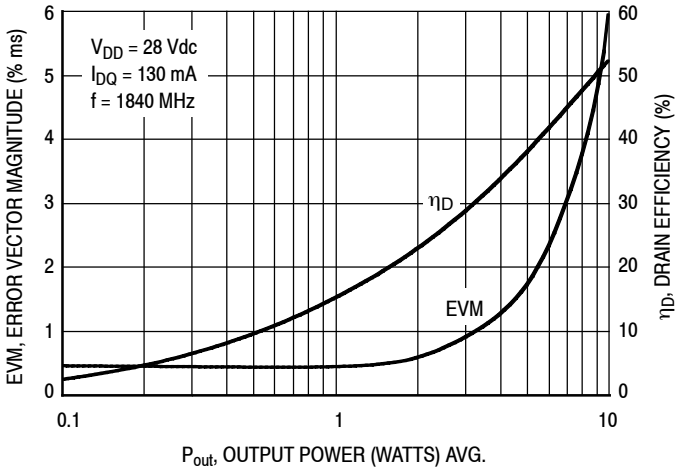


**Figure 27. Error Vector Magnitude and Drain Efficiency versus Output Power**

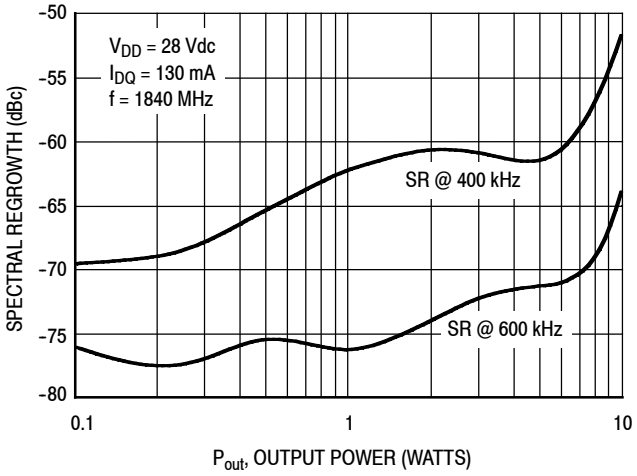


**Figure 28. Spectral Regrowth at 400 kHz and 600 kHz versus Output Power**

## GSM EDGE TEST SIGNAL

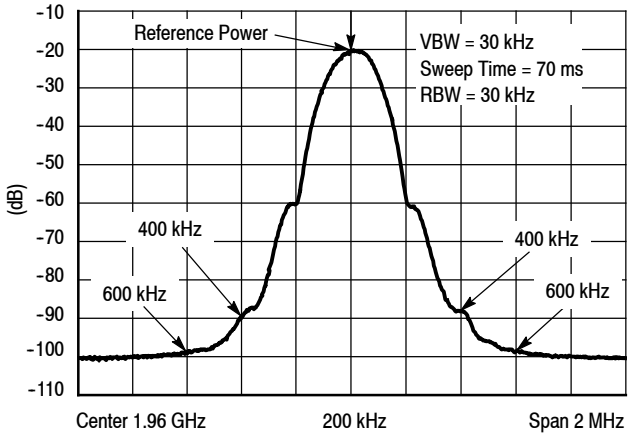


**Figure 29. EDGE Spectrum**

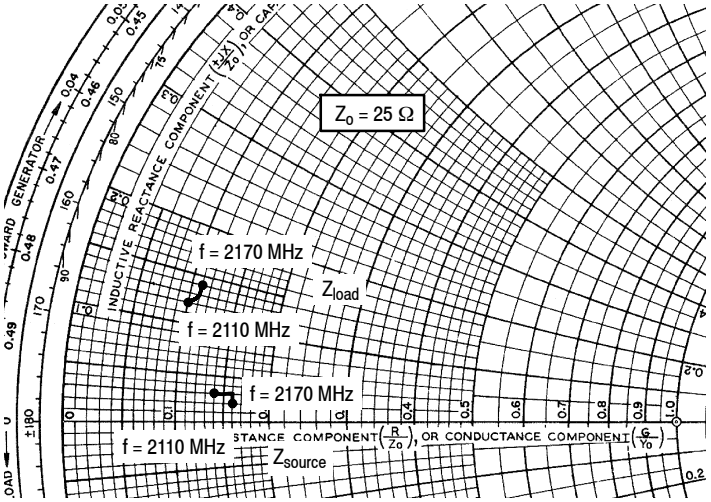


**2170 MHz**

$V_{DD}$ = 28 Vdc, $I_{DQ}$ = 130 mA, $P_{out}$ = 10 W PEP

| f MHz | $Z_{source}$ Ω | $Z_{load}$ Ω |
|---|---|---|
| 2110 | 3.619 + j0.792 | 2.544 + j3.068 |
| 2140 | 3.918 + j0.797 | 2.673 + j3.291 |
| 2170 | 4.087 + j0.558 | 2.818 + j3.406 |

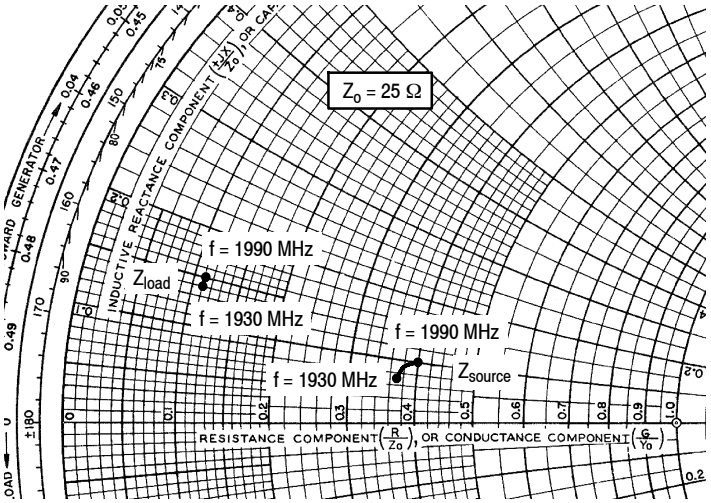


**1900 MHz**

$V_{DD}$ = 28 Vdc, $I_{DQ}$ = 130 mA, $P_{out}$ = 1 W Avg.

| f MHz | $Z_{source}$ Ω | $Z_{load}$ Ω |
|---|---|---|
| 1930 | 9.237 + j1.849 | 2.770 + j3.497 |
| 1960 | 9.521 + j2.144 | 2.754 + j3.668 |
| 1990 | 9.889 + j2.434 | 2.772 + j3.833 |

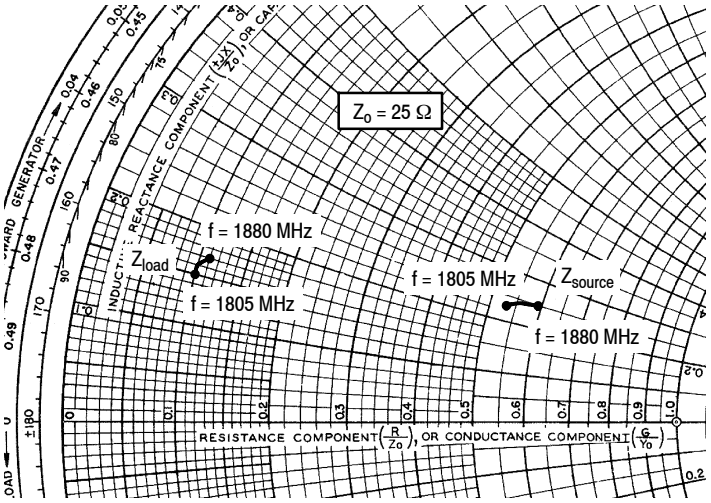


**1800 MHz**

$V_{DD}$ = 28 Vdc, $I_{DQ}$ = 130 mA, $P_{out}$ = 4 W Avg.

| f MHz | $Z_{source}$ Ω | $Z_{load}$ Ω |
|---|---|---|
| 1805 | 13.237 + j5.810 | 2.445 + j3.698 |
| 1840 | 13.953 + j6.084 | 2.542 + j3.942 |
| 1880 | 14.858 + j6.279 | 2.695 + j4.170 |

$Z_{source}$ = Test circuit impedance as measured from gate to ground.

$Z_{load}$ = Test circuit impedance as measured from drain to ground.

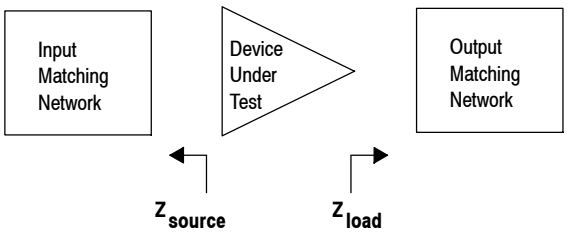


**Figure 30. Series Equivalent Source and Load Impedance**

**Table 9. Common Source Scattering Parameters** ($V_{DD}$ = 28 V, $I_{DQ}$ = 126 mA, $T_A$ = 25°C, 50 ohm system)

| f MHz | $S_{11}$ | | $S_{21}$ | | $S_{12}$ | | $S_{22}$ | |
|---|---|---|---|---|---|---|---|---|
| | $\|S_{11}\|$ | ∠ ϕ | $\|S_{21}\|$ | ∠ ϕ | $\|S_{12}\|$ | ∠ ϕ | $\|S_{22}\|$ | ∠ ϕ |
| 500 | 0.984 | −178.1 | 1.195 | 42.42 | 0.001 | −129.1 | 0.875 | −116.3 |
| 550 | 0.986 | −179.0 | 0.947 | 40.48 | 0.001 | −159.2 | 0.892 | −121.6 |
| 600 | 0.985 | 179.9 | 0.747 | 39.66 | 0.001 | 147.4 | 0.905 | −125.9 |
| 650 | 0.986 | 178.9 | 0.581 | 39.89 | 0.001 | 119.1 | 0.913 | −129.9 |
| 700 | 0.982 | 177.9 | 0.446 | 41.80 | 0.001 | 108.1 | 0.927 | −133.4 |
| 750 | 0.983 | 177.2 | 0.336 | 46.70 | 0.002 | 102.9 | 0.935 | −136.4 |
| 800 | 0.983 | 176.5 | 0.248 | 56.02 | 0.002 | 96.99 | 0.941 | −139.5 |
| 850 | 0.979 | 175.5 | 0.188 | 72.74 | 0.003 | 97.40 | 0.947 | −141.9 |
| 900 | 0.980 | 174.8 | 0.168 | 96.69 | 0.003 | 94.63 | 0.951 | −144.4 |
| 950 | 0.977 | 174.0 | 0.183 | 119.3 | 0.004 | 91.92 | 0.955 | −146.6 |
| 1000 | 0.978 | 173.2 | 0.223 | 134.3 | 0.004 | 92.80 | 0.960 | −148.6 |
| 1050 | 0.972 | 172.4 | 0.276 | 142.2 | 0.004 | 89.92 | 0.962 | −150.5 |
| 1100 | 0.972 | 171.4 | 0.335 | 146.4 | 0.005 | 89.90 | 0.966 | −152.2 |
| 1150 | 0.963 | 170.8 | 0.396 | 148.5 | 0.005 | 87.51 | 0.977 | −153.7 |
| 1200 | 0.964 | 169.9 | 0.461 | 148.8 | 0.006 | 89.25 | 0.971 | −155.2 |
| 1250 | 0.956 | 169.0 | 0.531 | 148.2 | 0.007 | 86.98 | 0.977 | −156.8 |
| 1300 | 0.948 | 167.8 | 0.604 | 146.9 | 0.007 | 85.08 | 0.982 | −157.9 |
| 1350 | 0.939 | 167.0 | 0.685 | 144.8 | 0.008 | 82.40 | 0.986 | −159.5 |
| 1400 | 0.927 | 165.7 | 0.772 | 142.2 | 0.008 | 79.69 | 0.988 | −160.7 |
| 1450 | 0.910 | 164.5 | 0.869 | 138.7 | 0.009 | 77.79 | 0.994 | −162.1 |
| 1500 | 0.889 | 163.2 | 0.975 | 134.7 | 0.010 | 75.79 | 0.991 | −163.4 |
| 1550 | 0.861 | 161.9 | 1.093 | 129.7 | 0.010 | 72.86 | 0.993 | −164.7 |
| 1600 | 0.821 | 160.9 | 1.221 | 123.8 | 0.011 | 69.89 | 0.996 | −166.0 |
| 1650 | 0.780 | 160.1 | 1.356 | 116.7 | 0.012 | 63.71 | 0.984 | −167.4 |
| 1700 | 0.722 | 160.6 | 1.491 | 108.3 | 0.013 | 57.70 | 0.985 | −168.5 |
| 1750 | 0.666 | 162.5 | 1.606 | 98.77 | 0.014 | 49.85 | 0.977 | −169.6 |
| 1800 | 0.618 | 167.0 | 1.687 | 88.09 | 0.014 | 41.19 | 0.970 | −170.8 |
| 1850 | 0.603 | 173.3 | 1.706 | 76.98 | 0.013 | 32.65 | 0.958 | −171.3 |
| 1900 | 0.614 | 179.7 | 1.673 | 66.08 | 0.012 | 25.40 | 0.954 | −171.9 |
| 1950 | 0.654 | −175.6 | 1.591 | 55.96 | 0.011 | 20.73 | 0.945 | −172.3 |
| 2000 | 0.701 | −173.5 | 1.484 | 47.04 | 0.010 | 15.11 | 0.947 | −172.6 |
| 2050 | 0.747 | −172.7 | 1.364 | 39.29 | 0.008 | 10.13 | 0.947 | −173.0 |
| 2100 | 0.783 | −172.6 | 1.242 | 32.87 | 0.006 | 6.333 | 0.945 | −173.6 |
| 2150 | 0.816 | −172.9 | 1.136 | 27.69 | 0.004 | 15.63 | 0.944 | −173.9 |
| 2200 | 0.842 | −173.6 | 1.042 | 23.26 | 0.004 | 42.20 | 0.944 | −174.2 |
| 2250 | 0.864 | −174.2 | 0.961 | 19.26 | 0.005 | 57.76 | 0.948 | −174.6 |
| 2300 | 0.882 | −175.0 | 0.888 | 15.75 | 0.006 | 62.56 | 0.948 | −175.2 |
| 2350 | 0.894 | −175.7 | 0.822 | 12.69 | 0.008 | 59.72 | 0.949 | −175.7 |
| 2400 | 0.906 | −176.4 | 0.764 | 9.857 | 0.009 | 49.09 | 0.951 | −176.1 |
| 2450 | 0.910 | −176.9 | 0.712 | 7.587 | 0.008 | 39.24 | 0.955 | −176.5 |

(continued)

**Table 9. Common Source Scattering Parameters** ($V_{DD}$ = 28 V, $I_{DQ}$ = 126 mA, $T_A$ = 25°C, 50 ohm system) **(continued)**

| f MHz | $S_{11}$ | | $S_{21}$ | | $S_{12}$ | | $S_{22}$ | |
|---|---|---|---|---|---|---|---|---|
| | $\|S_{11}\|$ | ∠ ϕ | $\|S_{21}\|$ | ∠ ϕ | $\|S_{12}\|$ | ∠ ϕ | $\|S_{22}\|$ | ∠ ϕ |
| 2500 | 0.923 | –177.5 | 0.666 | 5.462 | 0.006 | 42.56 | 0.957 | –177.2 |
| 2550 | 0.927 | –178.0 | 0.625 | 3.680 | 0.006 | 52.25 | 0.962 | –177.8 |
| 2600 | 0.937 | –178.8 | 0.591 | 1.864 | 0.006 | 60.26 | 0.961 | –178.4 |
| 2650 | 0.937 | –179.0 | 0.559 | 0.237 | 0.007 | 64.14 | 0.964 | –179.1 |
| 2700 | 0.942 | –179.8 | 0.529 | –1.378 | 0.007 | 65.62 | 0.964 | –179.6 |
| 2750 | 0.945 | –179.9 | 0.504 | –2.768 | 0.007 | 64.71 | 0.964 | 179.7 |
| 2800 | 0.946 | 179.5 | 0.479 | –4.088 | 0.007 | 67.58 | 0.966 | 179.4 |
| 2850 | 0.950 | 179.3 | 0.456 | –5.412 | 0.007 | 75.44 | 0.966 | 178.8 |
| 2900 | 0.949 | 178.8 | 0.436 | –6.305 | 0.008 | 82.04 | 0.964 | 178.3 |
| 2950 | 0.952 | 178.5 | 0.419 | –7.279 | 0.009 | 83.60 | 0.967 | 177.9 |
| 3000 | 0.950 | 178.4 | 0.402 | –8.087 | 0.011 | 83.41 | 0.968 | 177.4 |
| 3050 | 0.958 | 177.9 | 0.387 | –9.138 | 0.012 | 81.35 | 0.964 | 176.8 |
| 3100 | 0.953 | 177.7 | 0.373 | –9.904 | 0.013 | 77.45 | 0.969 | 176.4 |
| 3150 | 0.957 | 177.2 | 0.362 | –10.86 | 0.014 | 70.98 | 0.970 | 176.2 |
| 3200 | 0.960 | 177.4 | 0.350 | –11.79 | 0.013 | 67.00 | 0.970 | 175.5 |

## PACKAGE DIMENSIONS

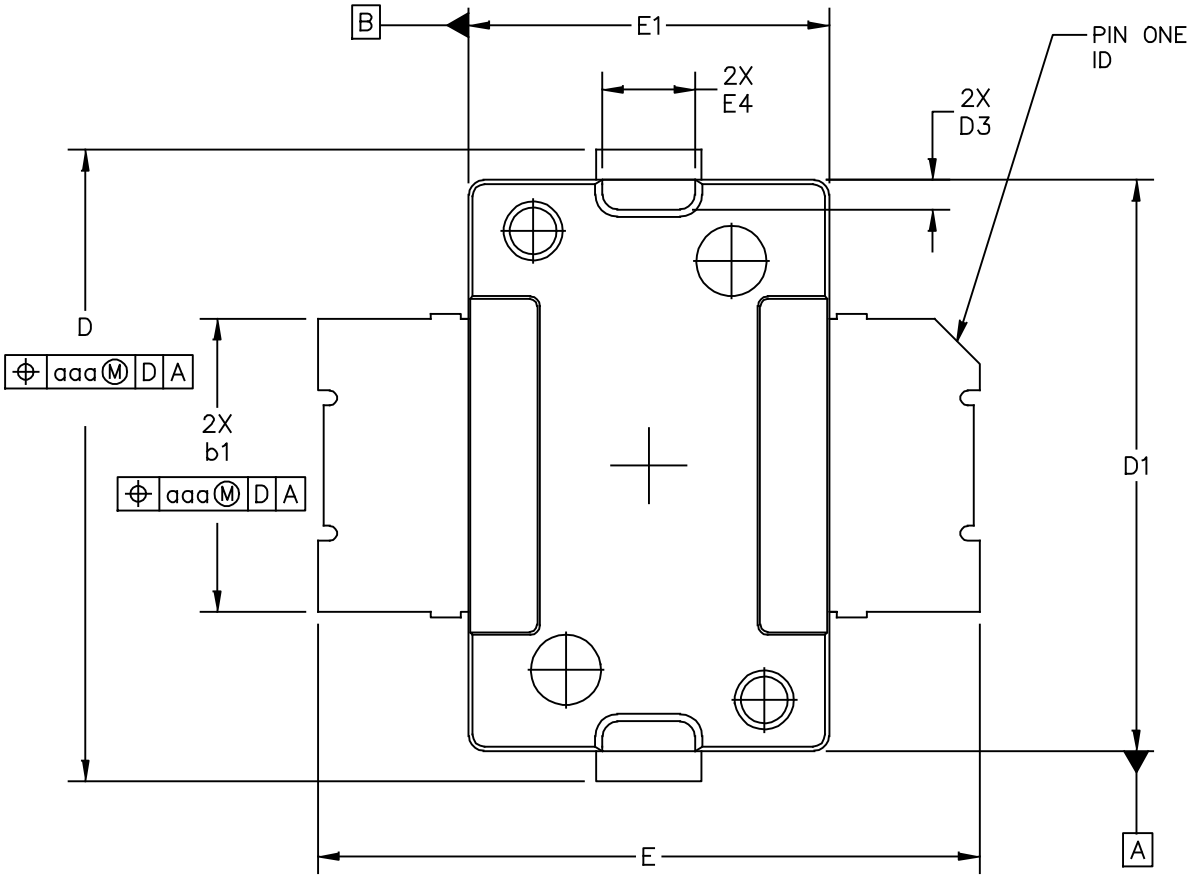


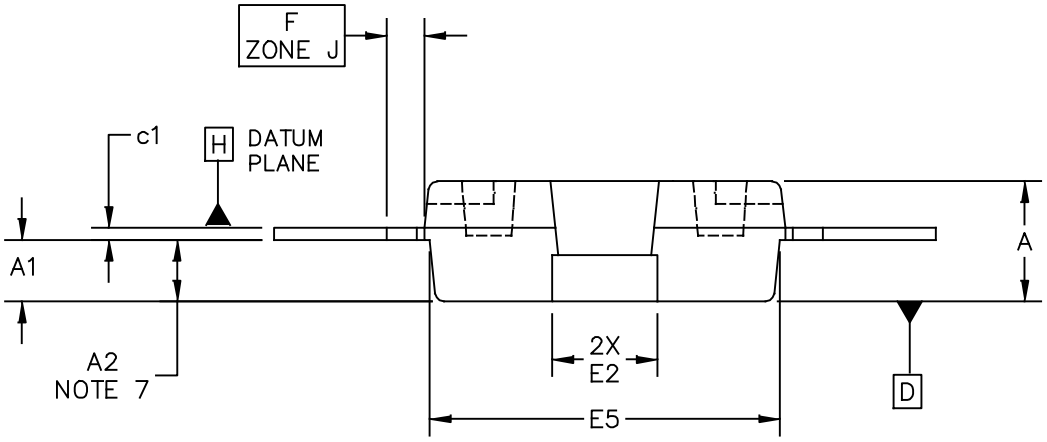


| © FREESCALE SEMICONDUCTOR, INC. ALL RIGHTS RESERVED. | MECHANICAL OUTLINE | PRINT VERSION NOT TO SCALE |
|---|---|---|
| TITLE: TO–270 SURFACE MOUNT | DOCUMENT NO: 98ASH98117A | REV: K |
| | CASE NUMBER: 1265–09 | 29 JUN 2007 |
| | STANDARD: JEDEC TO–270 AA | |

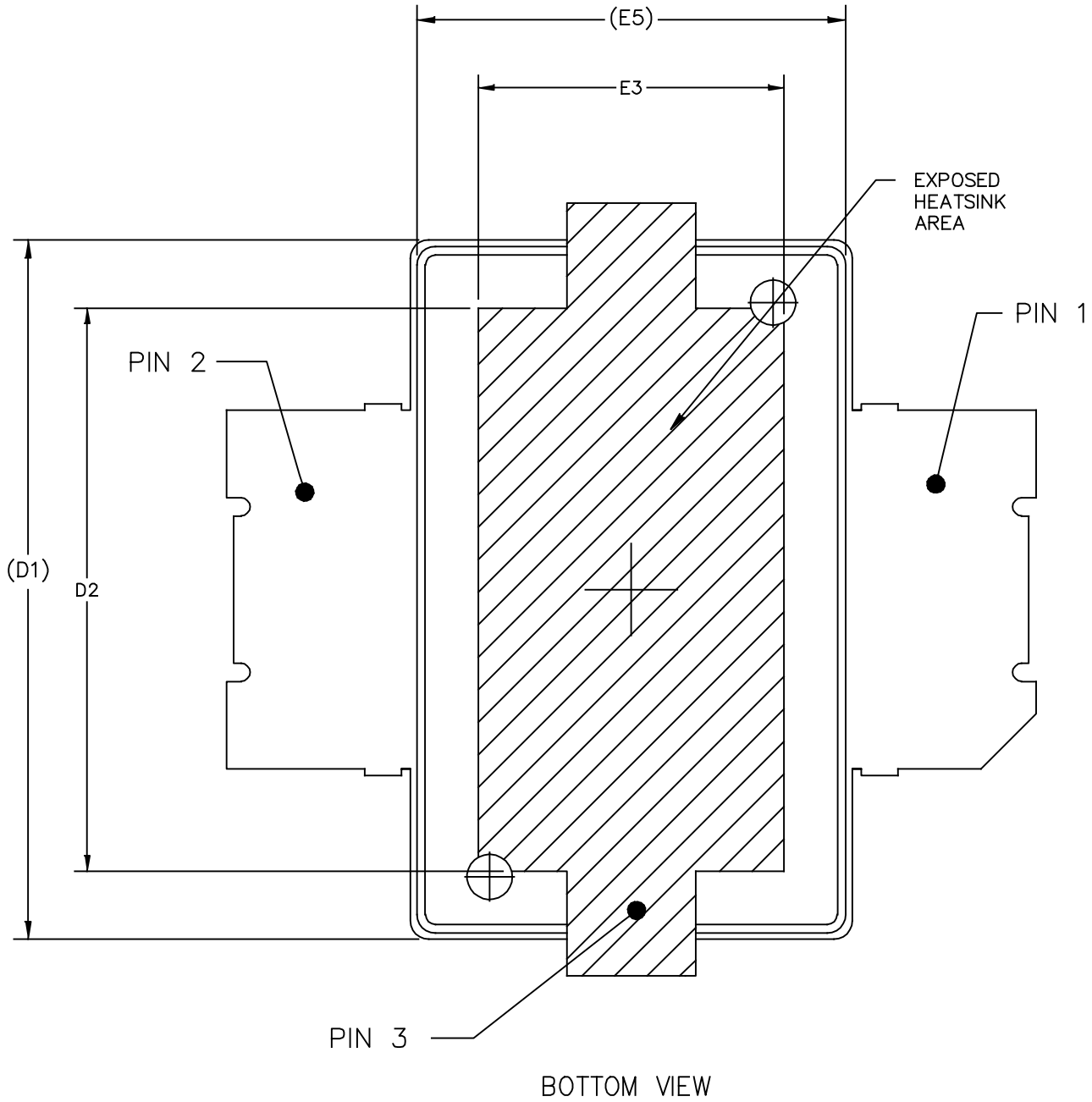


| © FREESCALE SEMICONDUCTOR, INC. ALL RIGHTS RESERVED. | MECHANICAL OUTLINE | PRINT VERSION NOT TO SCALE |
|---|---|---|
| TITLE: TO–270 SURFACE MOUNT | DOCUMENT NO: 98ASH98117A | REV: K |
| | CASE NUMBER: 1265–09 | 29 JUN 2007 |
| | STANDARD: JEDEC TO–270 AA | |

NOTES:
1. CONTROLLING DIMENSION: INCH

2. INTERPRET DIMENSIONS AND TOLERANCES PER ASME Y14.5M–1994.

3. DATUM PLANE –H– IS LOCATED AT TOP OF LEAD AND IS COINCIDENT WITH THE LEAD WHERE THE LEAD EXITS THE PLASTIC BODY AT THE TOP OF THE PARTING LINE.

4. DIMENSIONS "D1" AND "E1" DO NOT INCLUDE MOLD PROTRUSION. ALLOWABLE PROTRUSION IS .006 PER SIDE. DIMENSIONS "D1 AND "E1" DO INCLUDE MOLD MISMATCH AND ARE DETERMINED AT DATUM PLANE –H–.

5. DIMENSION "b1" DOES NOT INCLUDE DAMBAR PROTRUSION. ALLOWABLE DAMBAR PROTRUSION SHALL BE .005 TOTAL IN EXCESS OF THE "b1" DIMENSION AT MAXIMUM MATERIAL CONDITION.

6. DATUMS –A– AND –B– TO BE DETERMINED AT DATUM PLANE –H–.

7. DIMENSION "A2" APPLIES WITHIN ZONE "J" ONLY.

8. DIMENSIONS "D" AND "E2" DO NOT INCLUDE MOLD PROTRUSION. OVERALL LENGTH INCLUDING MOLD PROTRUSION SHOULD NOT EXCEED 0.430 INCH FOR DIMENSION "D" AND 0.080 INCH FOR DIMENSION "E2". DIMENSIONS "D" AND "E2" DO INCLUDE MOLD MISMATCH AND ARE DETERMINED AT DATUM PLANE –D–.

STYLE 1:
PIN 1 – DRAIN
PIN 2 – GATE
PIN 3 – SOURCE

| | INCH | | MILLIMETER | | | INCH | | MILLIMETER | |
|---|---|---|---|---|---|---|---|---|---|
| DIM | MIN | MAX | MIN | MAX | DIM | MIN | MAX | MIN | MAX |
| A | .078 | .082 | 1.98 | 2.08 | F | .025 BSC | | 0.64 BSC | |
| A1 | .039 | .043 | 0.99 | 1.09 | b1 | .193 | .199 | 4.90 | 5.06 |
| A2 | .040 | .042 | 1.02 | 1.07 | c1 | .007 | .011 | 0.18 | 0.28 |
| D | .416 | .424 | 10.57 | 10.77 | aaa | .004 | | 0.10 | |
| D1 | .378 | .382 | 9.60 | 9.70 | | | | | |
| D2 | .290 | ---- | 7.37 | ---- | | | | | |
| D3 | .016 | .024 | 0.41 | 0.61 | | | | | |
| E | .436 | .444 | 11.07 | 11.28 | | | | | |
| E1 | .238 | .242 | 6.04 | 6.15 | | | | | |
| E2 | .066 | .074 | 1.68 | 1.88 | | | | | |
| E3 | .150 | ---- | 3.81 | ---- | | | | | |
| E4 | .058 | .066 | 1.47 | 1.68 | | | | | |
| E5 | .231 | .235 | 5.87 | 5.97 | | | | | |

© FREESCALE SEMICONDUCTOR, INC.
ALL RIGHTS RESERVED.

MECHANICAL OUTLINE | PRINT VERSION NOT TO SCALE

TITLE:
TO–270
SURFACE MOUNT

DOCUMENT NO: 98ASH98117A | REV: K
CASE NUMBER: 1265–09 | 29 JUN 2007
STANDARD: JEDEC TO–270 AA

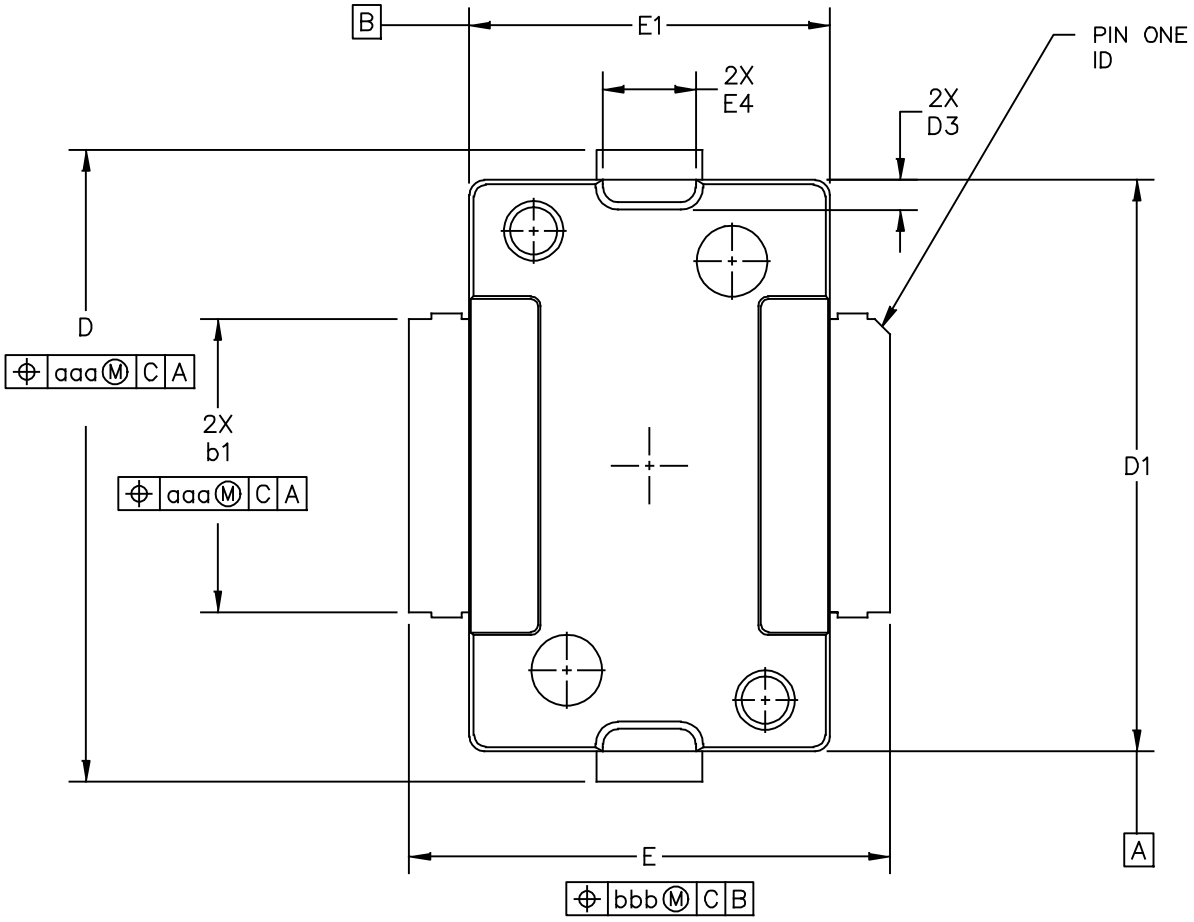


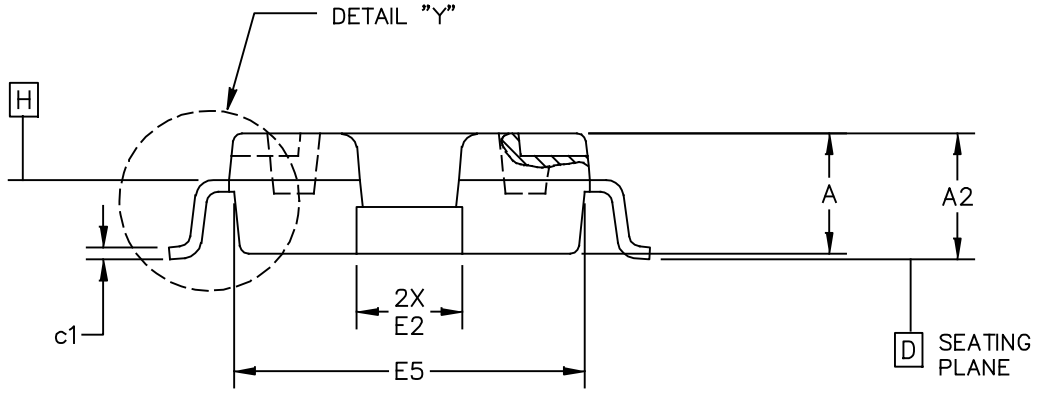


| © FREESCALE SEMICONDUCTOR, INC. ALL RIGHTS RESERVED. | MECHANICAL OUTLINE | PRINT VERSION NOT TO SCALE |
|---|---|---|
| TITLE: TO–270 GULL WING | DOCUMENT NO: 98ASA99301D | REV: C |
| | CASE NUMBER: 1265A–03 | 02 JUL 2007 |
| | STANDARD: JEDEC TO–270 BA | |

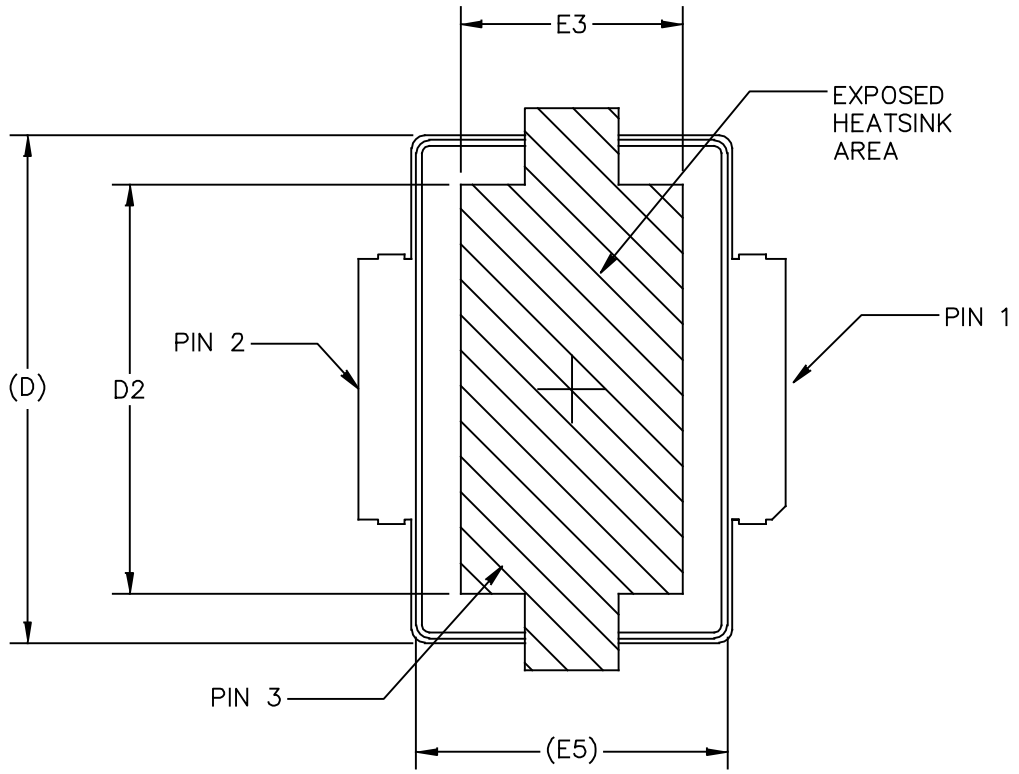


BOTTOM VIEW

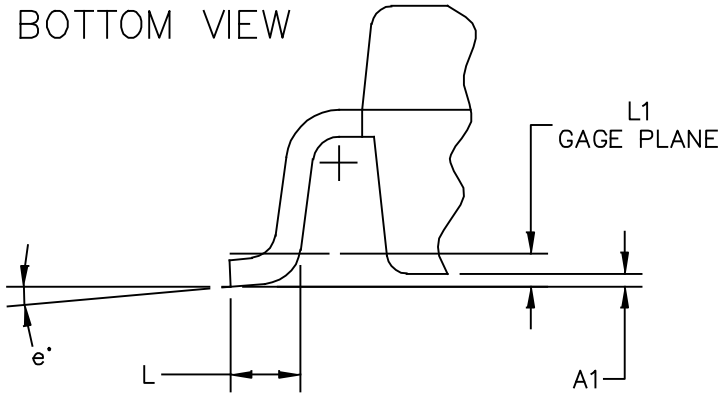


DETAIL "Y"

| | | |
|---|---|---|
| © FREESCALE SEMICONDUCTOR, INC. ALL RIGHTS RESERVED. | MECHANICAL OUTLINE | PRINT VERSION NOT TO SCALE |
| TITLE: TO–270 GULL WING | DOCUMENT NO: 98ASA99301D | REV: C |
| | CASE NUMBER: 1265A–03 | 02 JUL 2007 |
| | STANDARD: JEDEC TO–270 BA | |

NOTES:
1. CONTROLLING DIMENSION: INCH

2. INTERPRET DIMENSIONS AND TOLERANCES PER ASME Y14.5M–1994.

3. DATUM PLANE –H– IS LOCATED AT TOP OF LEAD AND IS COINCIDENT WITH THE LEAD WHERE THE LEAD EXITS THE PLASTIC BODY AT THE TOP OF THE PARTING LINE.

4. DIMENSIONS "D1" AND "E1" DO NOT INCLUDE MOLD PROTRUSION. ALLOWABLE PROTRUSION IS .006 PER SIDE. DIMENSIONS "D1 AND "E1" DO INCLUDE MOLD MISMATCH AND ARE DETERMINED AT DATUM PLANE –H–.

5. DIMENSION b1 DOES NOT INCLUDE DAMBAR PROTRUSION. ALLOWABLE DAMBAR PROTRUSION SHALL BE .005 TOTAL IN EXCESS OF THE b1 DIMENSION AT MAXIMUM MATERIAL CONDITION.

6. DATUMS –A– AND –B– TO BE DETERMINED AT DATUM PLANE –H–.

7. DIMENSIONS "D" AND "E2" DO NOT INCLUDE MOLD PROTRUSION. ALLOWABLE PROTRUSION IS .003 PER SIDE. DIMENSIONS "D AND "E2" DO INCLUDE MOLD MISMATCH AND ARE DETERMINED AT DATUM PLANE –D–.

STYLE 1:
PIN 1 – DRAIN
PIN 2 – GATE
PIN 3 – SOURCE

| DIM | INCH MIN | INCH MAX | MILLIMETER MIN | MILLIMETER MAX | DIM | INCH MIN | INCH MAX | MILLIMETER MIN | MILLIMETER MAX |
|---|---|---|---|---|---|---|---|---|---|
| A | .078 | .082 | 1.98 | 2.08 | L | .018 | .024 | 0.46 | 0.61 |
| A1 | .001 | .004 | 0.02 | 0.10 | L1 | .01 BSC | | 0.25 BSC | |
| A2 | .077 | .088 | 1.96 | 2.24 | b1 | .193 | .199 | 4.90 | 5.06 |
| D | .416 | .424 | 10.57 | 10.77 | c1 | .007 | .011 | 0.18 | 0.28 |
| D1 | .378 | .382 | 9.60 | 9.70 | e | 2° | 8° | 2° | 8° |
| D2 | .290 | – | 7.37 | – | aaa | .004 | | 0.10 | |
| D3 | .016 | .024 | 0.41 | 0.61 | | | | | |
| E | .316 | .324 | 8.03 | 8.23 | | | | | |
| E1 | .238 | .242 | 6.04 | 6.15 | | | | | |
| E2 | .066 | .074 | 1.68 | 1.88 | | | | | |
| E3 | .150 | – | 3.81 | – | | | | | |
| E4 | .058 | .066 | 1.47 | 1.68 | | | | | |
| E5 | .231 | .235 | 5.87 | 5.97 | | | | | |

© FREESCALE SEMICONDUCTOR, INC.
ALL RIGHTS RESERVED.

MECHANICAL OUTLINE | PRINT VERSION NOT TO SCALE

TITLE:
TO–270
GULL WING

DOCUMENT NO: 98ASA99301D | REV: C
CASE NUMBER: 1265A–03 | 02 JUL 2007
STANDARD: JEDEC TO–270 BA

## PRODUCT DOCUMENTATION

Refer to the following documents to aid your design process.

**Application Notes**

- AN1907: Solder Reflow Attach Method for High Power RF Devices in Plastic Packages
- AN1955: Thermal Measurement Methodology of RF Power Amplifiers
- AN3789: Clamping of High Power RF Transistors and RFICs in Over-Molded Plastic Packages

**Engineering Bulletins**

- EB212: Using Data Sheet Impedances for RF LDMOS Devices

## REVISION HISTORY

The following table summarizes revisions to this document.

| Revision | Date | Description |
|---|---|---|
| 0 | Dec. 2013 | • Initial Release of Data Sheet |
| 1 | Jan. 2014 | • Fig. 1, Pin Connections: corrected pin 1 and pin 2 labels to align with labelling in the mechanical outline, p. 1<br>• Table 2. Thermal Characteristics: CW thermal value changed from 2.5 to 2.3°C/W to reflect recent thermal test results; two-tone test corrected from 5 W PEP to 10 W PEP and the thermal value changed from 5.9 to 2.9°C/W to reflect recent thermal test results, p. 2 |

## *How to Reach Us:*

**Home Page:**
freescale.com

**Web Support:**
freescale.com/support

Information in this document is provided solely to enable system and software implementers to use Freescale products. There are no express or implied copyright licenses granted hereunder to design or fabricate any integrated circuits based on the information in this document.

Freescale reserves the right to make changes without further notice to any products herein. Freescale makes no warranty, representation, or guarantee regarding the suitability of its products for any particular purpose, nor does Freescale assume any liability arising out of the application or use of any product or circuit, and specifically disclaims any and all liability, including without limitation consequential or incidental damages. “Typical” parameters that may be provided in Freescale data sheets and/or specifications can and do vary in different applications, and actual performance may vary over time. All operating parameters, including “typicals,” must be validated for each customer application by customer’s technical experts. Freescale does not convey any license under its patent rights nor the rights of others. Freescale sells products pursuant to standard terms and conditions of sale, which can be found at the following address: freescale.com/SalesTermsandConditions.

Freescale and the Freescale logo are trademarks of Freescale Semiconductor, Inc., Reg. U.S. Pat. & Tm. Off. All other product or service names are the property of their respective owners.
© 2013–2014 Freescale Semiconductor, Inc.

Document Number: MMRF1004N
Rev. 1, 1/2014