Customer Information Sheet

DRAWING No.: M80-850XXXX	SHEET 2 OF 2	IF IN DOUBT - ASK	©	NOT TO SCALE	THIRD ANGLE PROJECTION	ALL DIMENSIONS IN mm

SPECIFICATONS:
- MATERIAL:
  - MOULDING = POLYAMIDE 46 UL94V-0, BLACK
  - CONTACTS = BERYLLIUM COPPER
- FINISH:
  - CONTACTS (ALL OVER NICKEL):
    - 01 = 0.3µ GOLD CLIP, 3.5µ 90/10 TIN/LEAD SHELL
    - 45 = 0.30µ GOLD CLIP, 0.28µ GOLD SHELL
    - 42 = 0.30µ GOLD CLIP, 4.0µ 100% TIN SHELL
- ELECTRICAL:
  - CURRENT RATING (25°C) = 3.0A MAX.
  - CURRENT RATING (85°C) = 2.2A MAX.
  - WORKING VOLTAGE = 800V AC/DC
  - VOLTAGE PROOF = 1200V AC/DC
  - CONTACT RESISTANCE:
    - INITIAL = 20 mΩ MAX.
    - AFTER CONDITIONING = 25 mΩ MAX.
  - INSULATION RESISTANCE:
    - INITIAL = 1000 MΩ MIN.
    - AFTER CONDITIONING = 100 MΩ MIN.
- MECHANICAL:
  - DURABILITY = 500 OPERATIONS
  - INSERTION FORCE (Ø0.5mm GAUGE) = 2.8N MAX
  - WITHDRAWAL FORCE (Ø0.5mm GAUGE) = 0.2N MIN
- ENVIRONMENTAL:
  - TEMPERATURE RANGE = -55°C TO +125°C
- PACKING:
  - TUBE

FOR COMPLETE SPECIFICATION, SEE COMPONENT SPECIFICATION C005XX (LATEST ISSUE)

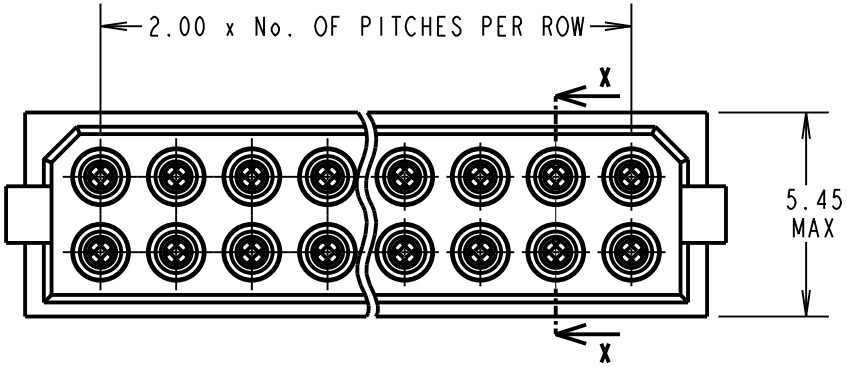

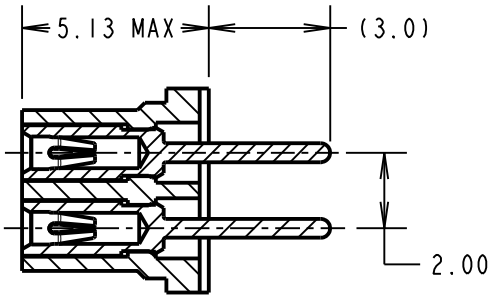

SECTION X-X

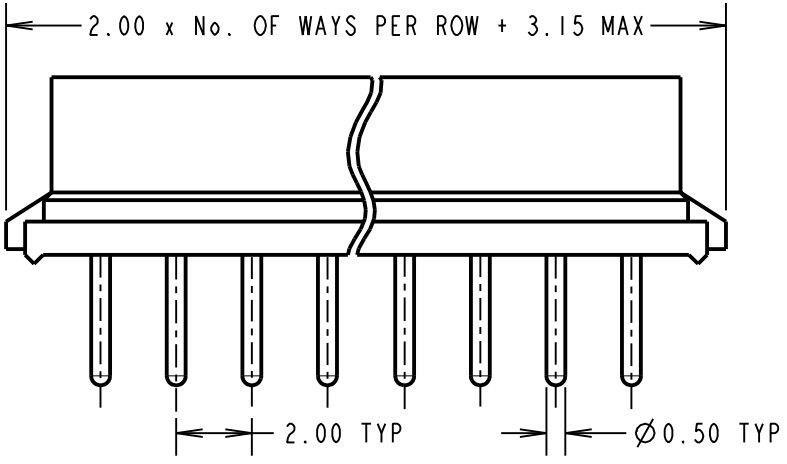

ORDER CODE:

M80-850XXXX

TOTAL No. OF WAYS
04, 06, 08, 10, 12, 14, 16, 18, 20, 26, 34, 44

FINISH:
- 01 = TIN/LEAD SHELL, GOLD CLIP
- 45 = GOLD SHELL, GOLD CLIP
- 42 = 100% TIN SHELL, GOLD CLIP

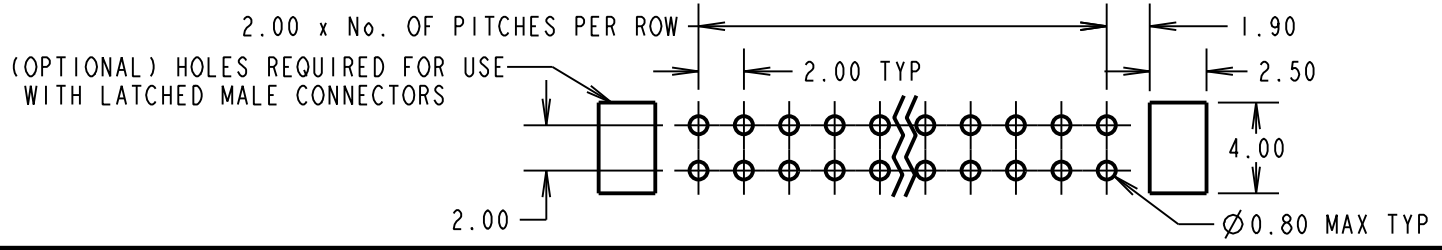

SB	10	02.03.12	11672
NAME	ISS.	DATE	C/NOTE

APPROVED:	S.BENNETT
CHECKED:	S.FLOWER
DRAWN:	I. SANDY
CUSTOMER REF.:	
ASSEMBLY DRG:	

HARWIN

www.harwin.com
technical@harwin.com

THIS DRAWING AND ANY INFORMATION OR DESCRIPTIVE MATTER SET OUT HEREON ARE CONFIDENTIAL AND COPYRIGHT PROPERTY OF THE HARWIN GROUP AND MUST NOT BE DISCLOSED, LOANED, COPIED OR USED FOR MANUFACTURING, TENDERING OR FOR ANY OTHER PURPOSE WITHOUT THEIR WRITTEN PERMISSION.

TOLERANCES
X. = ±1mm
X.X = ±0.25mm
X.XX = ±0.10mm
X.XXX = ±0.01mm
ANGLES = ±5°
UNLESS STATED

MATERIAL: SEE ABOVE

FINISH: SEE ABOVE

S/AREA: mm²

TITLE: DATAMATE DIL VERTICAL PC TAIL SOCKET ASSEMBLY (RoHS)

DRAWING NUMBER: **M80-850XXXX**

SHT 2 OF 2