HDM20216L-L

20 Character x 2 Lines, Large Character, LED Backlight

Dimensional Drawing

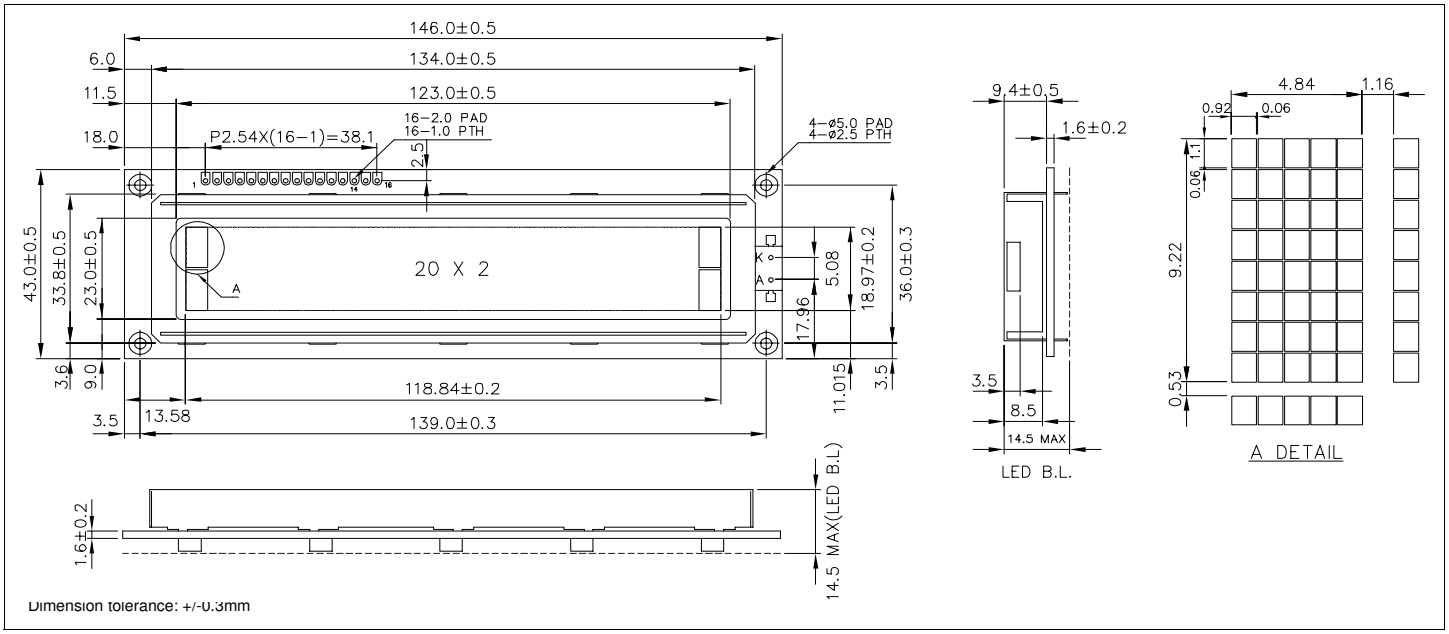

Features

Character Format .....5x7 Dots with Cursor
Backlight.....LED
Options....TN/Gray STN/Yellow STN, 12 o'Clock/6 o'Clock View
Normal/Extended Temperature
Normal/Negative Displays

Physical Data

Module Size.....146.0W x 43.0H x 14.5T mm
Viewing Area Size.....123.0W x 23.0H mm
Weight.....81g

Absolute Maximum Ratings

PARAMETER	SYMBOL	MIN	MAX	UNIT
SUPPLY VOLTAGE	V_{DD}-V_{SS}	0	6.5	V
SUPPLY VOLTAGE FOR LCD	V_{DD}-V_L	0	13.5	V
INPUT VOLTAGE	V_{IN}	-0.3	V_{DD}	V
OPERATING TEMPERATURE	T_{OP}	0	50	℃
STORAGE TEMPERATURE	T_{STG}	-20	70	℃

Electrical Characteristics (VDD=5.0±0.25V 25℃)

PARAMETER	SYM	CONDITION	MIN	TYP	MAX	UNIT
INPUT HIGH VOLTAGE	V_{IH}	-	2.2	-	-	V
INPUT LOW VOLTAGE	V_{IL}	-	-	-	0.6	V
OUTPUT HIGH VOLTAGE	V_{OH}	I_{OH}= 0.2mA	2.4	-	-	V
OUTPUT LOW VOLTAGE	V_{OL}	I_{OL}= 1.2mA	-	-	0.4	V
POWER SUPPLY CURRENT	I_{DD}	V_{DD}= 5.0V	-	-	2.0	mA
POWER SUPPLY FOR LCD	V_{DD}-V_L	T_A= 25℃	4.3	4.7	5.1	V
LED FORWARD VOLTAGE	V_F	I_F= 240mA	3.9	4.2	4.5	V
LED FORWARD CURRENT	I_F	V_F= 5.0V, R_{BL}= 3.3 ohm	-	240	-	mA
DRIVE METHOD	1/16 Duty					

Block Diagram

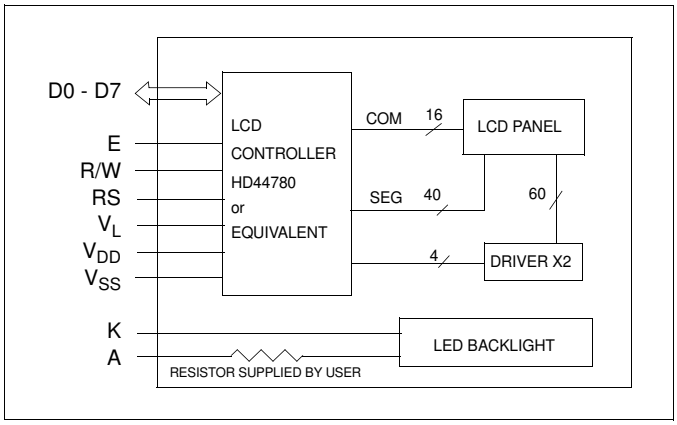

Pin Connections

PIN NO.	SYMBOL	LEVEL	FUNCTION	
1	V_{SS}	-	0V	Power supply
2	V_{DD}	-	5V	
3	V_L	-	-	
4	RS	H/L	H: Data input L: Instruction data input	
5	R/W	H/L	H: Data read L: Data write	
6	E	H,H→L	Enable signal	
7	D0	H/L	Data bus	
8	D1	H/L		
9	D2	H/L		
10	D3	H/L		
11	D4	H/L		
12	D5	H/L		
13	D6	H/L		
14	D7	H/L		
15	A	Anode connection for LED backlight		
16	K	Cathode connection for LED backlight		