Designed, Manufactured and Supported in the USA

VIKING PRODUCT MANUAL

COMMUNICATION & SECURITY SOLUTIONS

PA-60

60 Watt / 2 Zone Power Amplifier

April 25, 2013

60 Watt Compact Two Zone Amplifier to Drive up to 60 Paging Speakers

The **PA-60** can directly drive up to sixty (60) 8 ohm paging speakers or one hundred (100) 70 volt or 25 volt paging speakers. Both channels can be fed the same input so the **PA-60** can be used as a single large amplifier, or each channel can be fed different inputs so the **PA-60** can be used as a two zone amplifier.

Since each input has its own gain adjustment, one zone can be turned up louder for warehouse paging horn speakers, and the other zone can be turned down for office ceiling speakers. Two zones can also be helpful for instillations in which one group of speakers is connected to a source that provides background music using the Viking **PI-1A** Paging Interface unit, and the other zone provides only paging.

The Viking models **CTG-1** or **CTG-2** can be used to add clock controlled tones with paging to both zones, or one zone can have just paging and be free of the time scheduled alert tones. The same can be done with the Viking model **MTG-10** in which one zone can have just paging, and the other zone can have paging plus the 10 different siren, warble, and chime tones that the **MTG-10** can provide.

One or two **PA-60**'s can be added to the Viking model **ZPI-4** four zone paging interface to provide either 60 watts or 120 watts of total paging power in four zones. The **PA-60** can also be used to add additional paging power to other

Viking paging products such as the **PA-2A**, **PA-15**, and **PA-30**.

The **PA-60**'s inputs are transformer coupled so they are floating and isolated. Because of this they and can be connected to any line level audio signal, or by turning down the input gain control to unity gain, can be connected directly to the output of another amplifier. Because of this the **PA-60** can be connected directly to an existing paging system speaker wire run to extend the run with up to 60 more speakers.

Features

- 60 Watts of total paging power
- Two separate amplified zones of paging
- Drive up to (60) 8 ohm speakers
- Drive up to (100) 70V or 25V speakers
- Separate input gain controls for each channel
- Voltage, current, thermal, and short circuit protected
- Super high efficiency allows high power in a small package

www.vikingelectronics.com

Information: (715) 386-8861

Applications

- Amplified loud paging
- Zone paging
- Add more paging power for increased paging volume
- Add more speakers to an existing paging system

Specifications

Power: 100 - 240 VAC 50/60Hz 60w UL listed adapter provided
Dimensions: 133mm x 89mm x 44mm (5.25" x 3.5" x 1.75")
Shipping Weight: 1.36 kg (3 lbs)
Environmental: 0°C to 32°C (32°F to 90°F) with 5% to 95% non-condensing humidity
Paging Output: 60 watts - powers up to (60) 8 ohm speakers or (100) 70V or 25V speakers
Maximum Gain: 22dB
Input Sensitivity: 1.25Vrms
Harmonic Distortion @ 1kHz: -60dB
Frequency Response: 40Hz to 20kHz
Connections: (2) 6 position screw terminal block

Features Overview

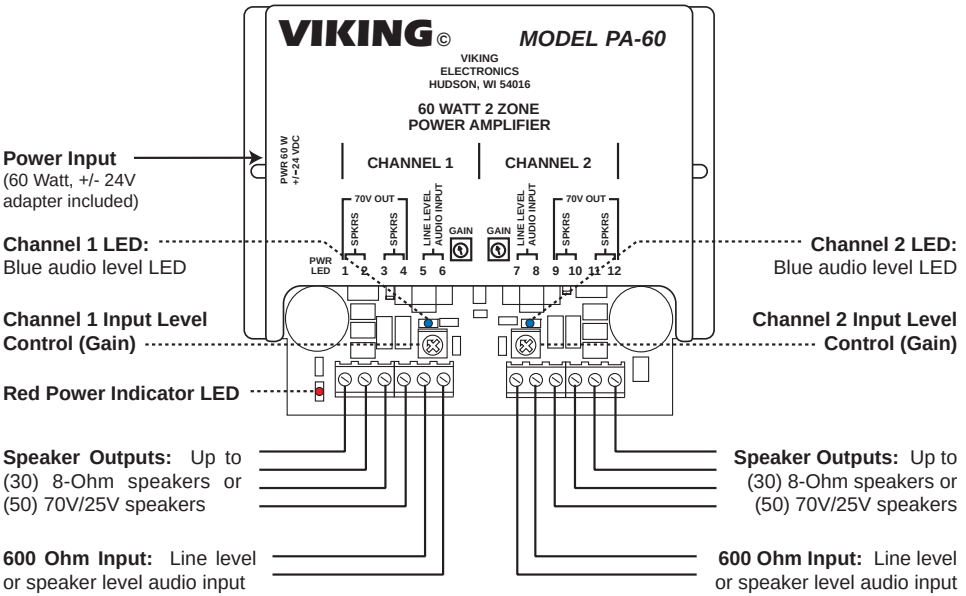

Installation

A. Warehouse and Office Paging

Step 1	Connect paging audio to both Channel 1 and Channel 2 audio inputs.
Step 2	Connect paging horns for the warehouse to one channel, and ceiling speaker for the office to the other channel.
Step 3	Use the two separate gain controls to independently adjust the paging volume level for both the warehouse and the office speakers.

Note: *For information on speakers to use, ambient noise levels, and speaker wiring, see* ***DOD# 498*** *and* ***895****.*

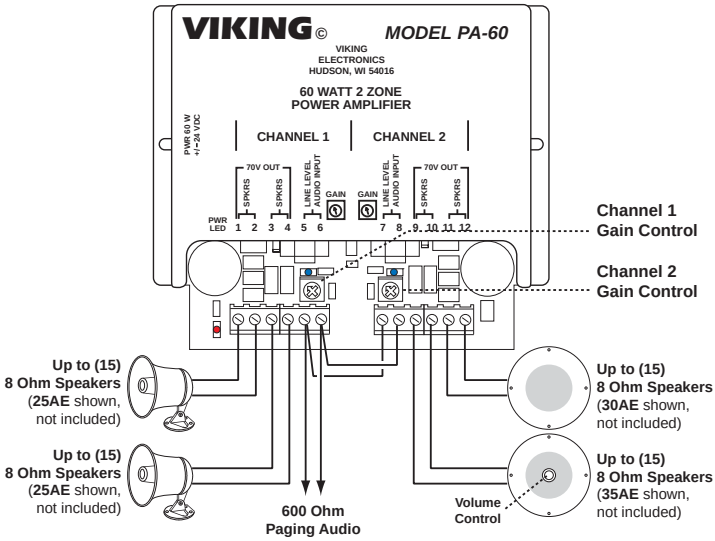

B. Extending an Existing Speaker Run

Step 1	Set input level control to the unity gain position as shown.
Step 2	Connect existing 8 Ohm speaker wire run into one or both channel inputs.
Step 3	Connect additional speakers to one or both channels.
Step 4	Adjust gain if needed.

Note: *For information on speakers to use, ambient noise levels, and speaker wiring, see* ***DOD# 498*** *and* ***895****.*

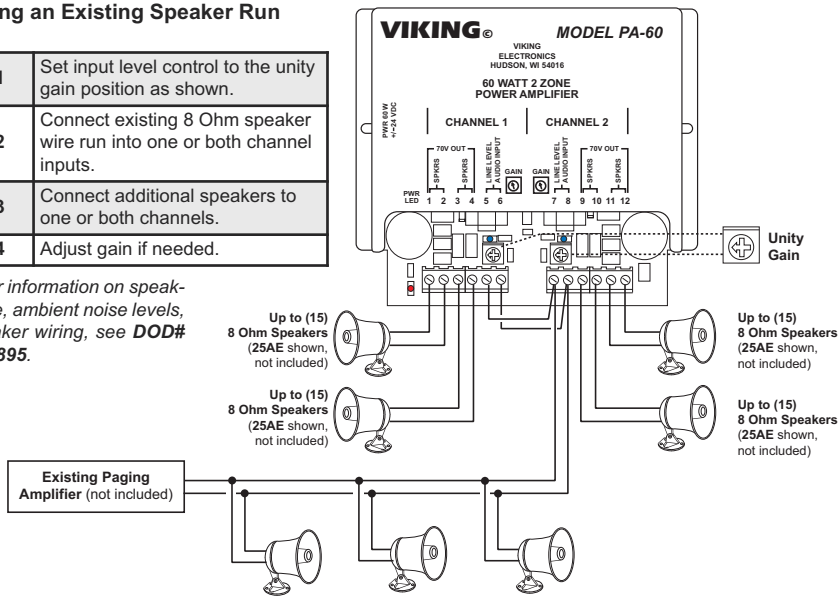

C. Add Additional Paging Power to Viking Model PA-2A, PA-15, and PA-30 Paging Amps

Step 1	Connect 600 Ohm audio output of the Viking model **PA-2A** (shown, **PA-15**, or **PA-30** to the audio inputs of the **PA-60**.
Step 2	Connect speakers to **PA-60**.
Step 3	Adjust gain controls as needed.

Note: *For information on speakers to use, ambient noise levels, and speaker wiring, see* ***DOD# 498*** *and* ***895****.*

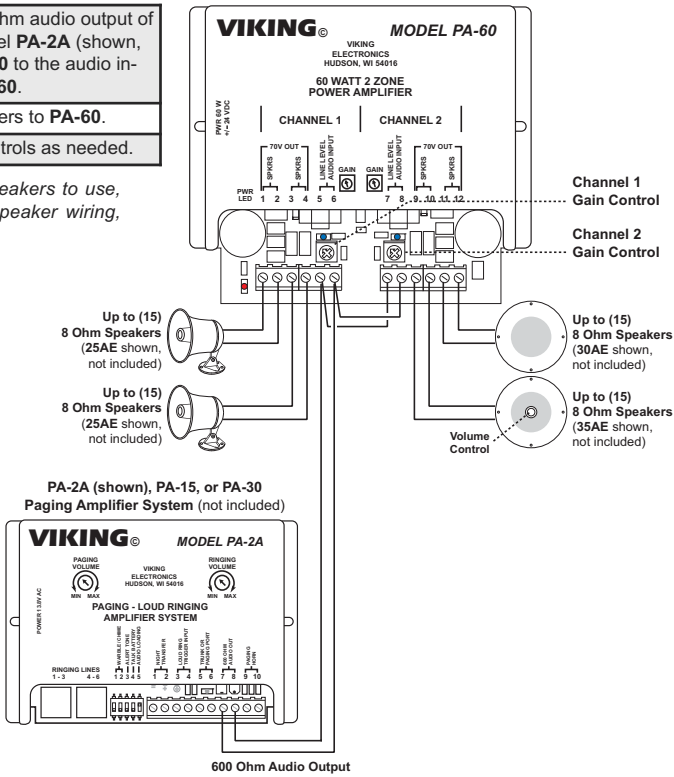

D. Add Background Music and/or Night Ringing to One or Both Channels

Step 1	Connect 600 Ohm paging audio directly to Channel 2 audio input.
Step 2	Connect the **PI-1A** to Channel 1 as shown using the **PI-1A** product manual (**DOD# 491**).
Step 3	Adjust gain controls as needed. Channel 1 speakers will sound paging as well as background music and/or night bell ringing. Channel 2 speakers will only sound paging

Note: *For information on speakers to use, ambient noise levels, and speaker wiring, see* ***DOD# 498*** *and* ***895****.*

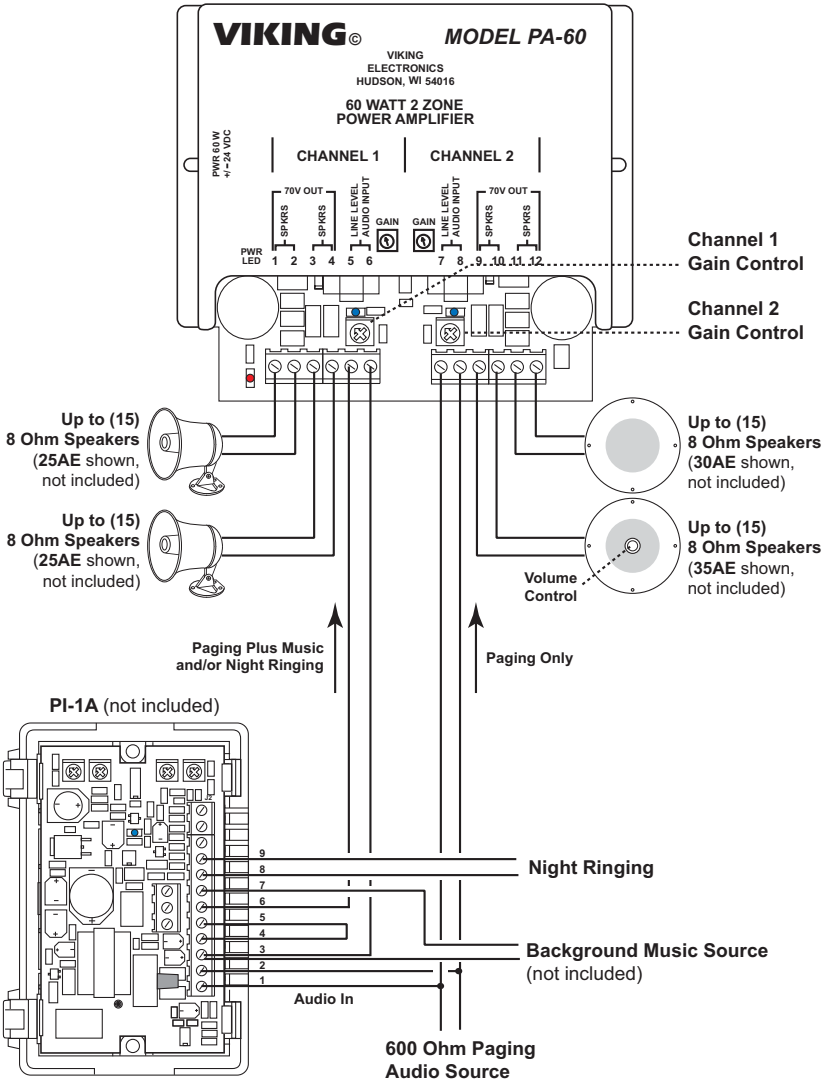

Note: *For complete* ***PI-1A*** *installation specifications, see* ***DOD# 491****.*

E. Add Clock or Push Button Controlled Tones/Buzzers/Chimes to One or Both Channels

Step 1	Connect 600 Ohm paging audio directly to Channel 2 audio input.
Step 2	Connect the **MTG-10**, **CTG-1**, or **CTG-2** to Channel 1 using the specific Product Manual.
Step 3	Adjust gain controls as needed. Speakers will sound paging as well as clock and push button controlled tones. Channel 2 speakers will only sound paging.

Note: *For information on speakers to use, ambient noise levels, and speaker wiring, see* ***DOD# 498*** *and* ***895****.*

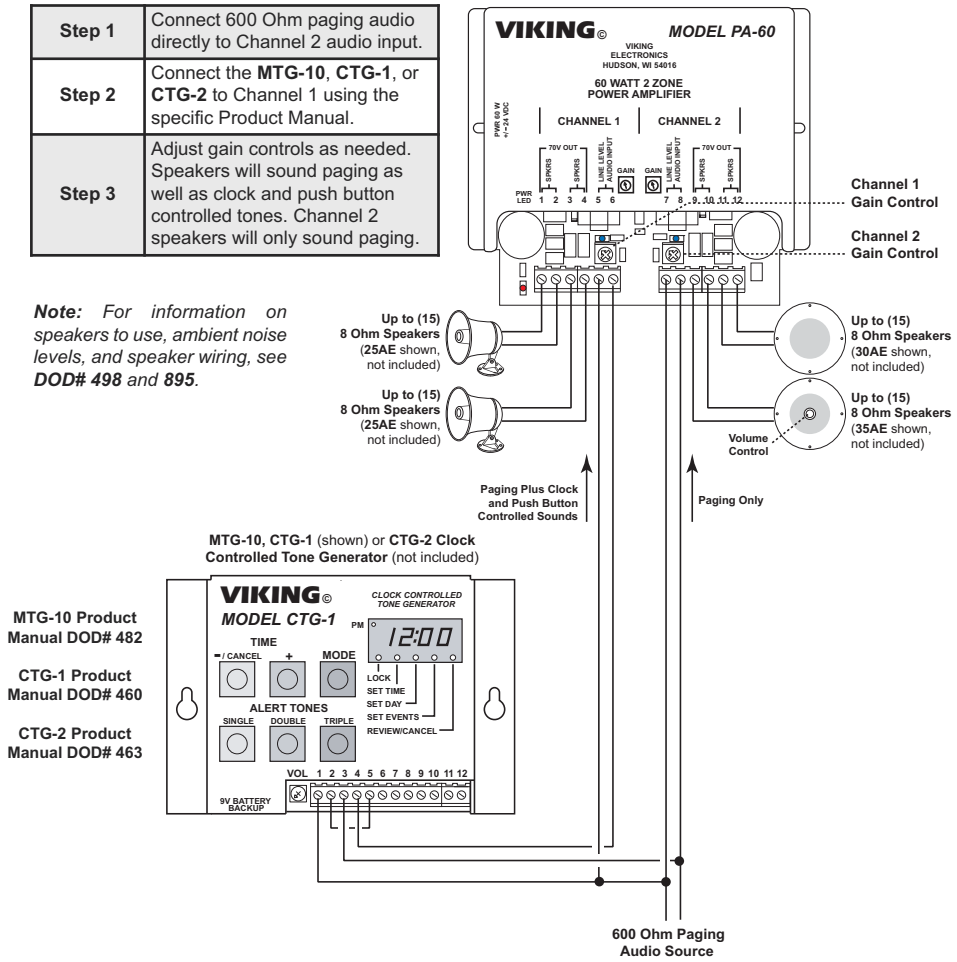

F. 70 Volt or 25 Volt Speakers

Step 1	Connect 70V or 25V speakers to Channel 1 screw terminals 1 & 4.
Step 2	Connect 70V or 25V speakers to Channel 2 screw terminals 9 & 12.

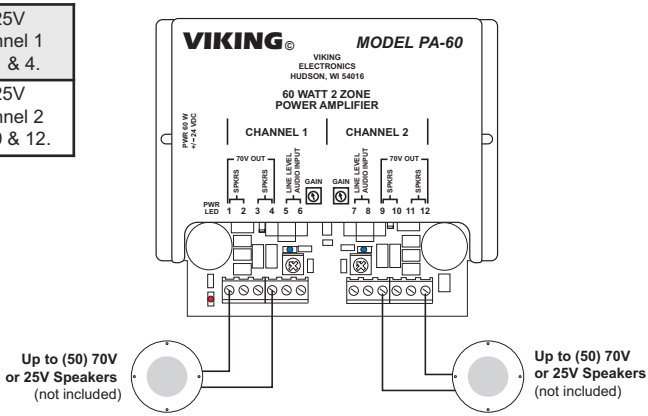

G. Very Loud Paging

Step 1	Connect one or two paging horns to Channel 1 screw terminals 1 & 4.
Step 2	Connect one or two paging horns to Channel 2 screw terminals 9 & 12.

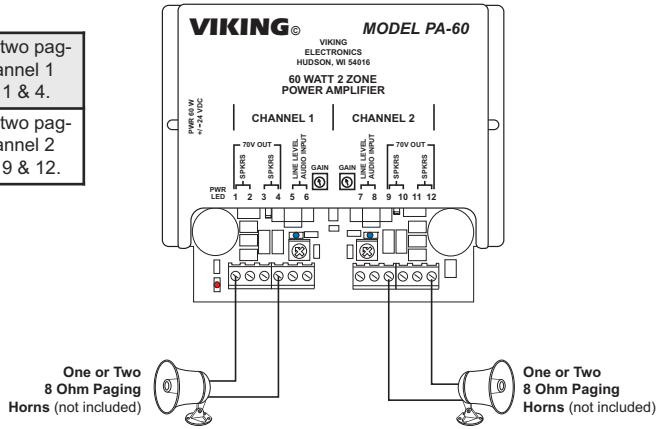

Speakers

A. Typical 8 Ohm Speakers

The **PA-60** contains two separate high current amplifiers for each channel, each of which can drive up to fifteen 8-ohm speakers. With two channels available, this means the **PA-60** is capable of driving a total of sixty (60) 8-ohm speakers. For best results, connect ½ of the speakers for each channel between the two amplifier outputs of that channel, to balance out the power handling. If both zones are used for the same audio signal, connect ¼ of the speakers to each of the four amplifier outputs if possible.

The more speakers that are used, the less shared power each speaker will receive, the softer they will each play. A single speaker with a short speaker wire run can receive the full 60 watts of power, where if 60 speakers are used, there will be less then 1 watt of power available for each speaker. See **DOD# 895** for additional information on paging horn volume per number of speakers being used. If additional paging power is needed, add a second Viking model **PA-60** for 60 more watts of paging power.

Another consideration when budgeting speakers is paging power that is lost in the wire runs. A single speaker on a short heavy gauge wire will have no loss, but many speakers on a long light gauge wire will have an unacceptable amount of volume lost. Use the below chart as a guide line to keep the volume lost limited to less then 5db. Using half the recommended distance or half as many speakers per run will keep the volume lost limited to less then 3db.

B. Managing Power Losses

The chart below shows the maximum recommended length (in feet) for the number of 8 Ohm speakers on a wire pair to maintain a volume loss of less than 5dB.

Wire Gauge Size										
#16	2,000'	1,000'	665'	500'	400'	330'	250'	200'	165'	135'
#18	1,250'	625'	420'	315'	250'	210'	155'	125'	105'	85'
#20	800'	400'	265'	200'	160'	130'	100'	80'	65'	50'
#22	500'	250'	165'	125'	100'	80'	60'	50'	40'	35'
#24	315'	155'	105'	80'	60'	50'	40'	30'	25'	20'
	1	**2**	**3**	**4**	**5**	**6**	**8**	**10**	**12**	**15**

Number of 8 Ohm Speakers on a Wire Run

Note 1: *Mount the amplifier close to where the speakers are installed to minimize the speaker wire run lengths.*

Note 2: *Using half the recommended distance or half as many speakers per run will keep the volume lost limited to 3db.*

Note 3: *Doubling up the wires will allow double the length, or reduce the amount of volume loss.*

Note 4: *Heavier gauge wire, fewer speakers per run, and shorter runs will all minimize volume loss.*

Note 5: *Use 70-Volt or 25-Volt speakers in applications that require wire run lengths greater then specified in the chart.*

C. 70-Volt and 25-Volt Speakers

Paging systems often utilize 70 volt or 25 volt speakers as a way to distribute audio with a minimal amount of power loss in the wire run. Typically, 70/25 volt speakers have an integral step down transformer that converts the high 70/25 volt signal down to a lower voltage for the speaker. The benefits of running a high voltage paging system are identical to the benefits of running high voltage power lines. That is, the higher the voltage is, the lower the current becomes. This is good because, as with lower current, there is less loss of power in the long wire runs due to resistance in the wire.

Since the **PA-60** has two amplifiers that are running in differential mode for each channel, the output across them together will have double the voltage swing. This Bridge Tied Load (BTL) strapping of the two amplifiers enables the use of 70 volt and 25 volt speakers when wired across screw terminals 1 and 4 of channel 1, and across screw terminals 9 and 12 of channel 2. If increased volume levels are needed, use a higher power tap on the 70/25 volt speaker.

When using 25 volt speakers on the **PA-60**, each speaker will actually receive twice as much power as the selected tap. To get 1 watt of power into a speaker, use its 1/2 watt tap. The sum of all the speakers' power taps should not exceed 15 watts on each channel, or 30 watts total for both channels.

When using 70 volt speakers on the **PA-60**, each speaker actually gets only ¼ as much power as the selected tap. To get 1 watt of power into a speaker, use its 4 watt tap. The sum of all the speakers' power taps should not exceed 120 watts on each channel, or 240 watts total for both channels.

Even though the **PA-60** is able to drive either 70/25 volt or 8 ohm speakers, it is not recommended to mix 70/25 volt speakers and 8 ohm speakers on the same channel.

D. Very Loud Paging

If the installation requires very loud paging, one or two 8 ohm speakers can be BTL strapped across each channel's differential amplifiers, (like 70/25 volt speakers as described above). Connect one or two 8 ohm speakers across screw terminals 1 and 4 of channel 1, and connect one or two 8 ohm speakers across screw terminals 9 and 12 of channel 2. This will provide 6dB more speaker volume than normal. If more than four 8 ohm speakers are needed, wiring them as described in section 1 (above), will provide best results.

Warranty

IF YOU HAVE A PROBLEM WITH A VIKING PRODUCT, CONTACT: VIKING TECHNICAL SUPPORT AT (715) 386-8666

Our Technical Support Department is available for assistance Monday 8am - 4pm and Tuesday through Friday 8am - 5pm central time. So that we can give you better service, before you call please:

1. Know the model number, the serial number and what software version you have (see serial label).
2. Have your Technical Practice in front of you.
3. It is best if you are on site.

RETURNING PRODUCT FOR REPAIR

The following procedure is for equipment that needs repair:

1. Customer must contact Viking's Technical Support Department at 715-386-8666 to obtain a Return Authorization (RA) number. The customer MUST have a complete description of the problem, with all pertinent information regarding the defect, such as options set, conditions, symptoms, methods to duplicate problem, frequency of failure, etc.
2. Packing: Return equipment in original box or in proper packing so that damage will not occur while in transit. Static sensitive equipment such as a circuit board should be in an anti-static bag, sandwiched between foam and individually boxed. All equipment should be wrapped to avoid packing material lodging in or sticking to the equipment. Include ALL parts of the equipment. C.O.D. or freight collect shipments cannot be accepted. Ship cartons prepaid to: **Viking Electronics, 1531 Industrial Street, Hudson, WI 54016**
3. Return shipping address: Be sure to include your return shipping address inside the box. We cannot ship to a PO Box.
4. RA number on carton: In large printing, write the R.A. number on the outside of each carton being returned.

RETURNING PRODUCT FOR EXCHANGE

The following procedure is for equipment that has failed out-of-box (within 10 days of purchase):

1. Customer must contact Viking's Technical Support at 715-386-8666 to determine possible causes for the problem. The customer MUST be able to step through recommended tests for diagnosis.
2. If the Technical Support Product Specialist determines that the equipment is defective based on the customer's input and troubleshooting, a Return Authorization (R.A.) number will be issued. This number is valid for fourteen (14) calendar days from the date of issue.
3. After obtaining the R.A. number, return the approved equipment to your distributor, referencing the R.A. number. Your distributor will then replace the Viking product using the same R.A. number.
4. The distributor will NOT exchange this product without first obtaining the R.A. number from you. If you haven't followed the steps listed in 1, 2 and 3, be aware that you will have to pay a restocking charge.

LIMITED WARRANTY

Viking warrants its products to be free from defects in the workmanship or materials, under normal use and service, for a period of one year from the date of purchase from any authorized Viking distributor or 18 months from the date manufactured, which ever is greater. If at any time during the warranty period, the product is deemed defective or malfunctions, return the product to Viking Electronics, Inc., 1531 Industrial Street, Hudson, WI., 54016. Customer must contact Viking's Technical Support Department at 715-386-8666 to obtain a Return Authorization (R.A.) number.

This warranty does not cover any damage to the product due to lightning, over voltage, under voltage, accident, misuse, abuse, negligence or any damage caused by use of the product by the purchaser or others. This warranty does not cover non-EWP products that have been exposed to wet or corrosive environments.

NO OTHER WARRANTIES. VIKING MAKES NO WARRANTIES RELATING TO ITS PRODUCTS OTHER THAN AS DESCRIBED ABOVE AND DISCLAIMS ANY EXPRESS OR IMPLIED WARRANTIES OR MERCHANTABILITY OR FITNESS FOR ANY PARTICULAR PURPOSE.

EXCLUSION OF CONSEQUENTIAL DAMAGES. VIKING SHALL NOT, UNDER ANY CIRCUMSTANCES, BE LIABLE TO PURCHASER, OR ANY OTHER PARTY, FOR CONSEQUENTIAL, INCIDENTAL, SPECIAL OR EXEMPLARY DAMAGES ARISING OUT OF OR RELATED TO THE SALE OR USE OF THE PRODUCT SOLD HEREUNDER.

EXCLUSIVE REMEDY AND LIMITATION OF LIABILITY. WHETHER IN AN ACTION BASED ON CONTRACT, TORT (INCLUDING NEGLIGENCE OR STRICT LIABILITY) OR ANY OTHER LEGAL THEORY, ANY LIABILITY OF VIKING SHALL BE LIMITED TO REPAIR OR REPLACEMENT OF THE PRODUCT, OR AT VIKING'S OPTION, REFUND OF THE PURCHASE PRICE AS THE EXCLUSIVE REMEDY AND ANY LIABILITY OF VIKING SHALL BE SO LIMITED.

IT IS EXPRESSLY UNDERSTOOD AND AGREED THAT EACH AND EVERY PROVISION OF THIS AGREEMENT WHICH PROVIDES FOR DISCLAIMER OF WARRANTIES, EXCLUSION OF CONSEQUENTIAL DAMAGES, AND EXCLUSIVE REMEDY AND LIMITATION OF LIABILITY, ARE SEVERABLE FROM ANY OTHER PROVISION AND EACH PROVISION IS A SEPARABLE AND INDEPENDENT ELEMENT OF RISK ALLOCATION AND IS INTENDED TO BE ENFORCED AS SUCH.

Product Support: (715) 386-8666

Due to the dynamic nature of the product design, the information contained in this document is subject to change without notice. Viking Electronics, and its affiliates and/or subsidiaries assume no responsibility for errors and omissions contained in this information. Revisions of this document or new editions of it may be issued to incorporate such changes.