Designed, Manufactured and Supported in the USA

VIKING PRODUCT MANUAL

COMMUNICATION & SECURITY SOLUTIONS

PA-30

30 Watt Paging Amp with Loud Ringing

July 1, 2014

Add Paging and Loud Ringing with Background Music to Any Phone System

The **PA-30** can directly drive up to thirty (30) 8 ohm paging speakers or fifty (50) 70 volt or 25 volt paging speakers.

The **PA-30** provides loud ringing and paging to electronic key systems, 1A2 Key systems, PABX's as well as No-KSU phones and multi-line phones.

Paging is accomplished by connecting the **PA-30** to a paging port or unused telephone line input (trunk port) of nearly any phone system.

The **PA-30** will also generate adjustable loud ringing from a ringing analog line or from a dry contact closure. Either a loud electronic warble, or one of three other soft chime sounds may be selected. An external "night transfer" switch can be added to turn loud ringing on or off in night bell applications.

The **PA-30** is easy to install and eliminates the installation of multiple bells, relays and paging cards. The unit comes complete with a power supply, and integrated 30 watt amplifier.

Features

- 30 Watts of paging power
- Drive up to (30) 8 ohm speakers
- Drive up to (50) 70V or 25V speakers
- Master volume control
- Separate volume controls for Auxiliary Input, Paging, Ringing Tones and Background Music
- Choose from up to 4 ringing sounds:
  - Electronic warble (traditional loud ringer)
  - Double gong (two identical "gong" tones)
  - Quadruple chime (four descending chimes)
  - Door chime (ding-dong)
- Provides loud ringing or night bell
- Night transfer switch
- Page from an unused trunk port or paging port
- Can provide background music from an external source
- Use as a low cost stand alone power amplifier
- 600 Ohm output to drive additional amplifiers
- Use multiple units for more paging power

Applications

- Amplified loud paging
- Loud ringing
- Night bell
- Background music

www.vikingelectronics.com
Information: (715) 386-8861

Specifications

Power: 120V AC/15V AC 2.2A UL listed adapter provided
Dimensions: 133mm x 89mm x 44mm (5.25" x 3.5" x 1.75")
Shipping Weight: 1.36 kg (3 lbs)
Environmental: 0°C to 32°C (32°F to 90°F) with 5% to 95% non-condensing humidity
Paging Output: 30 watts - powers up to (30) 8 ohm speakers or (50) 70V or 25V speakers
Talk Battery: 40V DC
Connections: (1) 3.5mm (1/8") audio jack, (1) 17 position screw terminal block

Features Overview

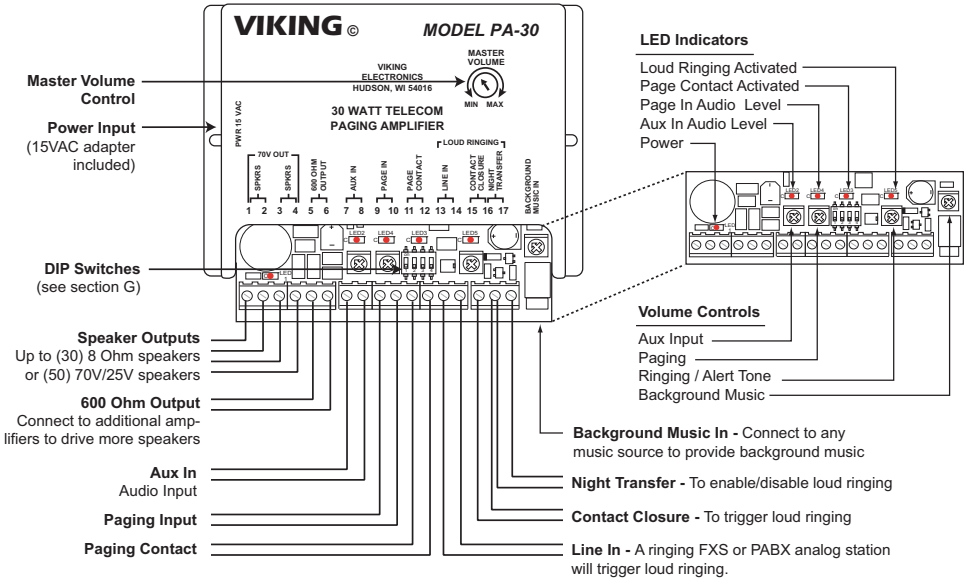

Installation

A. Amplified Loud Paging

1. Paging Port

Step 1	Move the **TALK BATTERY** DIP switch to the **OFF** position (**DIP** switch **1**).
Step 2	Connect pins **9** and **10** to the paging port output.
Step 3	Connect pins **11** and **12** to the paging contacts (if available).
Step 4	Adjust the page level trim pot so the Page LED flashes with page audio.

Important: *Page Alert Tone is not given when page contacts are not provided.*

Note: *For information on speakers to use, ambient noise levels, and speaker wiring, see* ***DOD# 498*** *and* ***895****.*

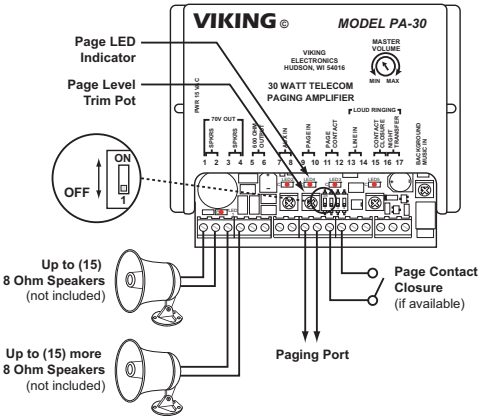

2. Trunk/Line Port

Step 1	Move the **TALK BATTERY** DIP switch to the **ON** position (**DIP** switch **1**).
Step 2	Connect pins **9** and **10** to an unused telephone line input (trunk port), or FXO.
Step 3	Adjust the page level trim pot so the page LED flashes with page audio.

Note: *For information on speakers to use, ambient noise levels, and speaker wiring, see* ***DOD# 498*** *and* ***895****.*

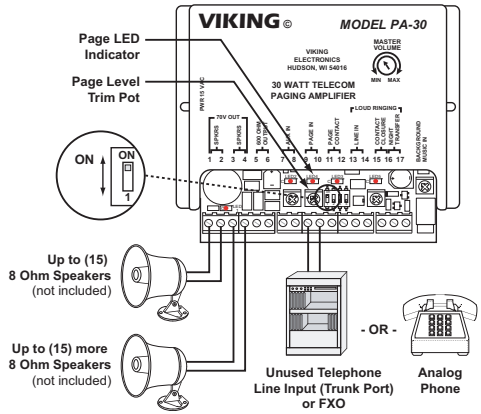

B. Loud Ringing / Night Bell

1. Ringing Analog Lines

Step 1	Connect pins **13** and **14** to a ringing FXS or analog PABX station.
Step 2	The loud ringing pot may be adjusted to set volume.
Step 3	A night transfer switch may be added to pins **16** and **17** to enable and disable loud ringing.

Note: *For information on speakers to use, ambient noise levels, and speaker wiring, see* ***DOD# 498*** *and* ***895****.*

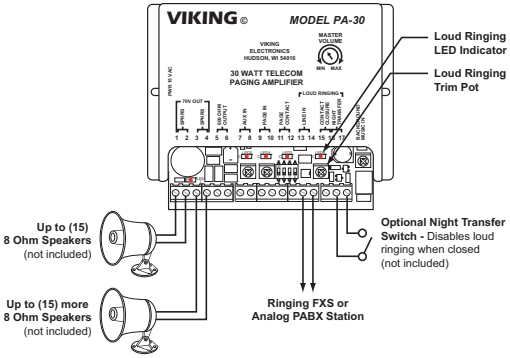

2. Dry Contact (Common Audible) Closure (contacts not included)

Step 1	Connect the dry contact closure to pins **15** and **16**.
Step 2	A dry contact closure will initiate loud ringing.

Note: *For information on speakers to use, ambient noise levels, and speaker wiring, see* ***DOD# 498*** *and* ***895****.*

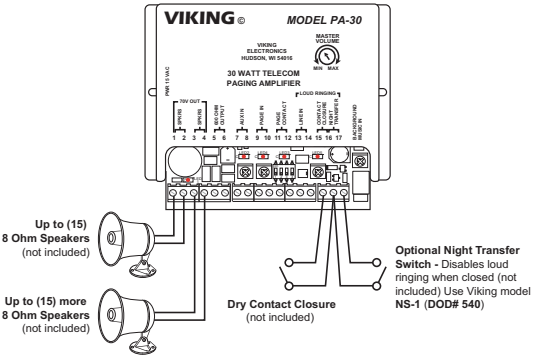

C. Auxiliary Input

Step 1	Connect pins **7** and **8** to any other line level audio source.
Step 2	Adjust the aux in level trim pot so the aux in LED flashes with aux audio.

Note: *For information on speakers to use, ambient noise levels, and speaker wiring, see* ***DOD# 498*** *and* ***895****.*

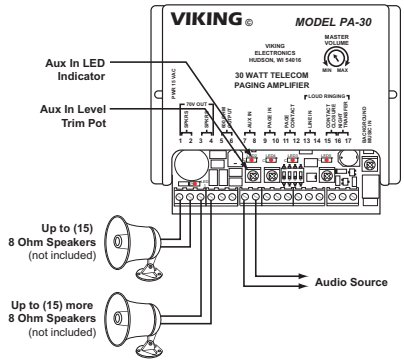

D. Background Music

Step 1	Connect a background music source to the background music in jack using the 1/8" (3.5mm) cable provided.
Step 2	Adjust the background music trim pot to the desired volume.
Step 3	Background music will play when all other inputs are idle.

Note: *For information on speakers to use, ambient noise levels, and speaker wiring, see* ***DOD# 498*** *and* ***895****.*

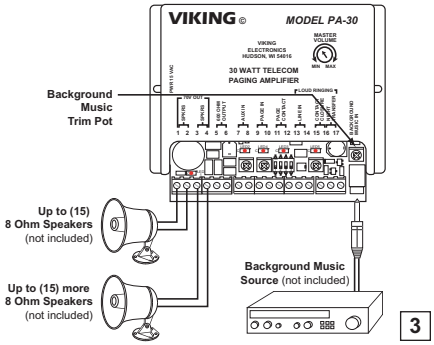

E. Additional Paging Power

When more than 30 Watts of power is required, an additional **PA-30** or 60 Watt **PA-60** (DOD# 493, not shown) can be added.

Step 1	Connect the main **PA-30** as described on previous pages.
Step 2	Move the talk battery DIP switch to the **OFF** position (DIP switch **1**).
Step 3	Connect the main **PA-30** 600 Ohm Output (pins **5** & **6**) to a second **PA-30** Page In (pins **9** & **10**).
Step 4	Add a jumper wire across the Page Contact (pins **11** & **12**) of the second **PA-30**.

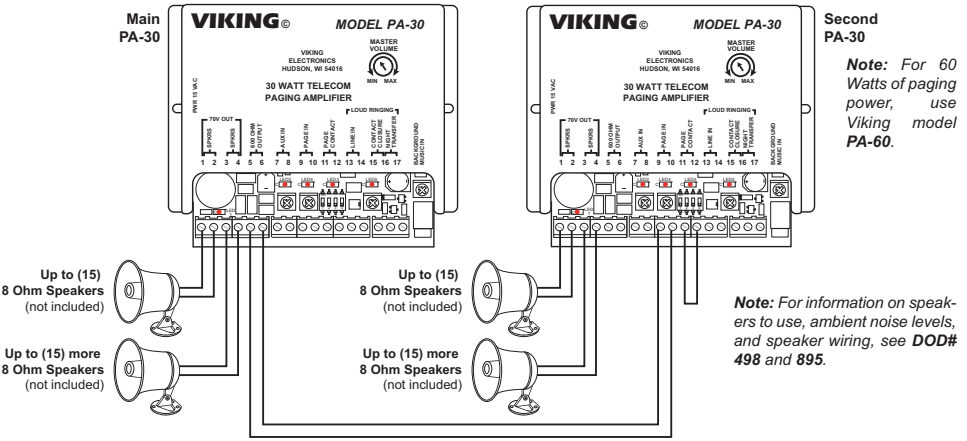

Note: *For 60 Watts of paging power, use Viking model* ***PA-60****.*

Note: *For information on speakers to use, ambient noise levels, and speaker wiring, see* ***DOD# 498*** *and* ***895****.*

F. 70 Volt or 25 Volt Speakers

Step 1	Connect pins 1 & 4 to the 70 volt or 25 volt speakers.
Step 2	For increased volume levels change the speaker's "tap" to a higher power level.

Note: *For information on speakers to use, ambient noise levels, and speaker wiring, see* ***DOD# 498*** *and* ***895****.*

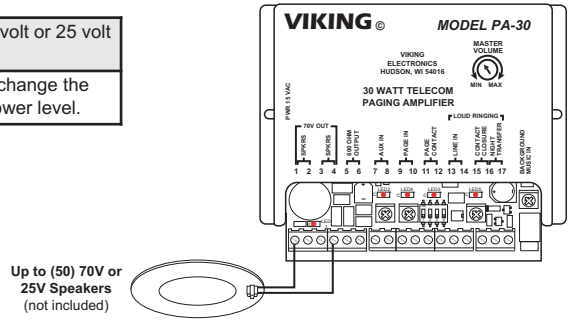

G. Very Loud Paging

If very loud paging is required, one or two 8-Ohm speakers can be connected in a way that provides 6dB of additional speaker volume.

Connect one or two 8-Ohm speakers to pins 1 and 4.

Note: *For information on speakers to use, ambient noise levels, and speaker wiring, see* ***DOD# 498*** *and* ***895****.*

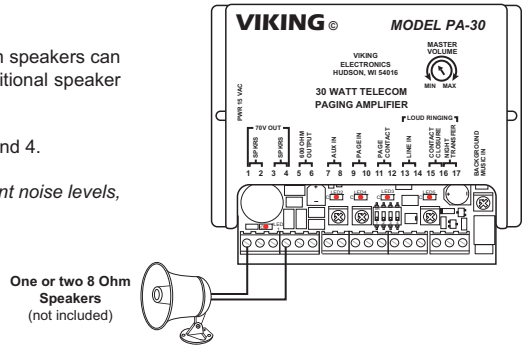

Programming

DIP Switch Programming

Switch	Position	Description
1	OFF	Talk Battery disabled (use for paging port)
1	ON	Talk Battery enabled (use for trunk input)
2	OFF	Normal Priority: Aux In → Page → Ringing → Background Music
2	ON	Alternative Priority: Page → Aux In → Ringing → Background Music

Switch 3	Switch 4	Sound Output Description
OFF	OFF	Electronic Warble (Loudest Sound)
OFF	ON	Double Gong (Soft & Pleasant)
ON	OFF	Quadruple Chime (Soft & Pleasant)
ON	ON	Door Chime (Soft & Pleasant)

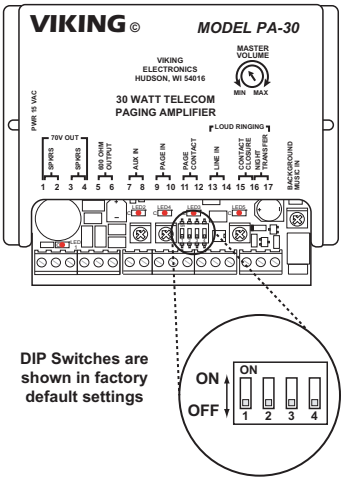

DIP Switches are shown in factory default settings

Sound Output Specifications

All tones require a minimum of 180ms of ringing voltage (or contact closure) to trigger. Once triggered, the electronic warble will run continuously until ringing stops (or contacts open). All other tones (double gong, quadruple chime, doorbell) will run through their full sequence once and will not cycle again until the ringing stops (or contact opens) for at least 50ms and a second ring signal (or contact closure) triggers them again.

A. Electronic Warble (Traditional Loud Ringer)

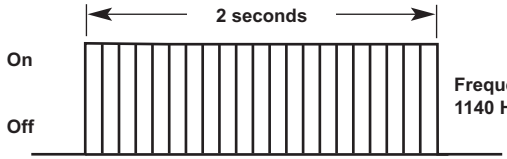

Frequency alternates between 1440 Hz and 1140 Hz 20 times per second.

B. Double Gong (Two "Gong" Tones)

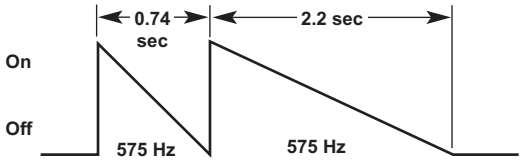

C. Quadruple Chime (Four Descending Chime Tones)

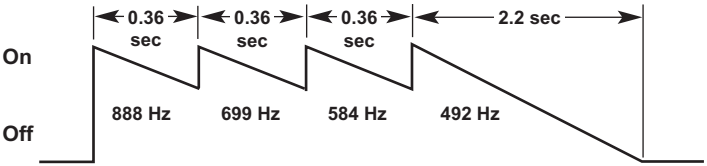

D. Door Chime (Ding-Dong)

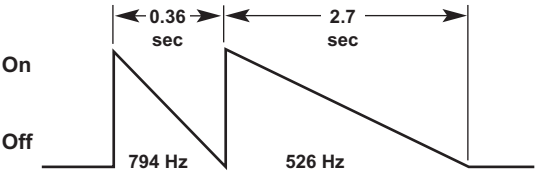

A. Typical 8 Ohm Speakers

The **PA-30** contains two separate high current amplifiers, each of which can drive up to fifteen 8-ohm speakers. This means the **PA-30** is capable of driving a total of thirty (30) 8-ohm speakers. For best results, connect ½ of the speakers across screw terminals 1 & 2 (the first amplifier), and connect the other ½ of the speakers across terminals 3 & 4 (the second amplifier), to balance out the power handling.

The more speakers that are used, the less shared power each speaker will receive, the softer they will each play. A single speaker with a short speaker wire run can receive the full 30 watts of power, where if 30 speakers are used, there will be less then 1 watt of power available for each speaker. See **DOD# 895** for additional information on paging horn volume per number of speakers being used. If additional paging power is needed, add a Viking model **PA-60** for 60 more watts of paging power.

Another consideration when budgeting speakers is paging power that is lost in the wire runs. A single speaker on a short heavy gauge wire will have no loss, but many speakers on a long light gauge wire will have an unacceptable amount of volume lost. Use the below chart as a guide line to keep the volume lost limited to less then 5db. Using half the recommended distance or half as many speakers per run will keep the volume lost limited to less then 3db.

B. Managing Power Losses

The chart below shows the maximum recommended length (in feet) for the number of 8 Ohm speakers on each of the two wire pairs to maintain a volume loss of less than 5dB.

Wire Gauge Size										
#16	2,000'	1,000'	665'	500'	400'	330'	250'	200'	165'	135'
#18	1,250'	625'	420'	315'	250'	210'	155'	125'	105'	85'
#20	800'	400'	265'	200'	160'	130'	100'	80'	65'	50'
#22	500'	250'	165'	125'	100'	80'	60'	50'	40'	35'
#24	315'	155'	105'	80'	60'	50'	40'	30'	25'	20'
	1	**2**	**3**	**4**	**5**	**6**	**8**	**10**	**12**	**15**

Number of 8 Ohm Speakers on Each of the Two Wire Runs

Note 1: *Mount the amplifier close to where the speakers are installed to minimize the speaker wire run lengths.*

Note 2: *Using half the recommended distance or half as many speakers per run will keep the volume lost limited to 3db.*

Note 3: *Doubling up the wires will allow double the length, or reduce the amount of volume loss.*

Note 4: *Heavier gauge wire, fewer speakers per run, and shorter runs will all minimize volume loss.*

Note 5: *Use 70-Volt or 25-Volt speakers in applications that require wire run lengths greater then specified in the chart.*

C. 70-Volt and 25-Volt Speakers

Paging systems often utilize 70 volt or 25 volt speakers as a way to distribute audio with a minimal amount of power loss in the wire run. Typically, 70/25 volt speakers have an integral step down transformer that converts the high 70/25 volt signal down to a lower voltage for the speaker. The benefits of running a high voltage paging system are identical to the benefits of running high voltage power lines. That is, the higher the voltage is, the lower the current becomes. This is good because, as with lower current, there is less loss of power in the long wire runs due to resistance in the wire.

Since the **PA-30** has two amplifiers that are running in differential mode, the output across them together will have double the voltage swing. This Bridge Tied Load (BTL) strapping of the two amplifiers enables the use of 70 volt and 25 volt speakers when wired across screw terminals 1 and 4. If increased volume levels are needed, use a higher power tap on the 70/25 volt speaker.

When using 25 volt speakers on the **PA-30**, each speaker will actually receive twice as much power as the selected tap. To get 1 watt of power into a speaker, use its 1/2 watt tap. The sum of all the speakers' power taps should not exceed 15 watts (which will actually provide 30 watts of power).

When using 70 volt speakers on the **PA-30**, each speaker actually gets only ¼ as much power as the selected tap. To get 1 watt of power into a speaker, use its 4 watt tap. The sum of all the speakers' power taps should not exceed 120 watts (which will actually provide 30 watts of power).

Even though the **PA-30** is able to drive either 70/25 volt or 8 ohm speakers, it is not recommended to mix 70/25 volt speakers and 8 ohm speakers.

D. Very Loud Paging

If the installation requires very loud paging, one or two 8 ohm speakers can be BTL strapped across the differential amplifiers, (like 70/25 volt speakers as described above). Connect one or two 8 ohm speakers across screw terminals 1 and 4. This will provide 6dB more speaker volume than normal. If more than two 8 ohm speakers are needed, wiring them as described in section A (above), will provide best results.

Operation

A. Background Music In

This audio input allows background music from an external source to plug into the **PA-30**. While any other input is active, background music is turned off, so music will only be heard through the speakers when all other inputs are idle. A 3.5mm (1/8") audio cable is provided, and the music level can be set using the trim POT just behind the Background Music input jack.

B. Loud Ringing

1. Line In

This input provides loud ringing through the speakers whenever ringing voltage is detected. Connect an analog ringing line to screw terminals 13 &14 for this feature.

2. Contact Closure

This input provides loud ringing through the speakers whenever a contact closure is detected. Some phone systems provide a "common audible" dry contact closure whenever a call is coming in. Wire the contact closure across screw terminals 15 & 16 to provide loud ringing from the **PA-30**.

3. Night Transfer

This input can be used to disable loud ringing. For example, if loud ringing is only necessary during off business hours, an external switch can be added to disable loud ringing during the day, and transfer it back on at night. Wire an external switch across terminals 16 & 17. When the switch is closed, loud ringing will be disabled.

4. Loud Ringing Sounds

The **PA-30** can produce one of 4 selectable loud ringing sounds. Use DIP Switches 3 and 4 to choose between Electronic Warble, Double Gong, Quadruple Chime, or Door Chime sounds for loud ringing. Select the Electronic Warble tone (traditional loud ringing) for noisy areas. The softer chime tones work well in less noisy environments.

C. Paging

1. Page In

This audio input allows paging from a phone system's Paging Port, a phone system's unused Telephone Line Input (Trunk Port), FXO, or even a simple dedicated analog phone. Wire the appropriate page source to screw terminals 9 & 10.

If paging from a phone system's unused Telephone Line Input (Trunk Port), FXO, or dedicated analog phone, DIP Switch 1 must be turned ON so the **PA-30** will provide the necessary 40V DC of Talk Battery. To page, either access that Trunk Port or go off hook on the analog phone. Loop current will be detected and activate paging. Wait for the Page Alert Tone to pass, and then speak.

If paging from a Paging Port and the Page Contacts are not used, the **PA-30** relies on a Voice Activation Switch (VOX) feature that will switch to paging when voice audio is detected. This means the voice audio must be loud enough to be detected; in addition, there is not an opportunity for the **PA-30** to produce a page alert tone. The VOX sensitivity can be adjusted using the Page Level Trim Pot located just behind the Page In screw terminals. Adjust this Pot so the Page LED flashes with page audio. To page, simply access the phone systems paging port and speak.

If paging from a Paging Port and Page Contacts are used (see below), the **PA-30** will provide a Page Alert Tone. To page, access the phone systems paging port, wait for the Page Alert Tone to pass, and then speak.

2. Page Contacts

Page Contacts are only useful if paging from a phone system's Paging Port (see above). If a Page Contact Closure is available from the phone system, wire it to screw terminals 11 & 12. A contact closure will activate the **PA-30**'s Paging Input.

D. Aux In

This audio input allows any additional audio sources to be connected into the **PA-30** on screw terminals 7 & 8. Possible uses are: audio from another paging system, clock controlled tones to announce work shift times (see Viking model **CTG-1**), emergency siren (see Viking model **MTG-10**), digitally recorded announcements (see Viking model **DVA-500A** or **DVA-2WA**), etc.

The **PA-30** relies on a Voice Activation Switch (VOX) feature that will switch to the Aux Input when audio is loud enough to be detected. The VOX sensitivity can be adjusted using the Aux In Level Trim Pot located just behind the Aux In screw terminals. Adjust this Pot so the Aux In LED flashes with Aux audio.

E. 600 Ohm Output

This audio output is provided so that additional paging amplifiers can be added if additional paging power is needed. This is a 600 ohm line level output that can be connected into any single ended amplifier input (such as a second **PA-30**).

F. Master Volume

A master volume control is provided. This adjustment only affects the gain of the **PA-30**'s output amplifier. Use it to set the power level going to the speakers.

G. Priorities

Since there are multiple uses and inputs to the **PA-30**, priorities need to be established to prevent contentions. If two inputs are activated at the same time, the one with the highest priority will take effect. Examples: Paging is higher priority then Loud Ringing, so Paging would interrupt loud ringing tones. Background Music input is always the lowest priority, and thus can be interrupted by any other input. Two different DIP Switch programmable Priority selections are available as listed below.

Normal Priority (DIP Switch 2 OFF)	Alternative Priority (DIP Switch 2 ON)
1. Aux In	**1.** Paging
2. Paging	**2.** Aux In
3. Ringing	**3.** Ringing
4. Background Music	**4.** Background Music

Warranty

IF YOU HAVE A PROBLEM WITH A VIKING PRODUCT, CONTACT: VIKING TECHNICAL SUPPORT AT (715) 386-8666

Our Technical Support Department is available for assistance Monday 8am - 4pm and Tuesday through Friday 8am - 5pm central time. So that we can give you better service, before you call please:

1. Know the model number, the serial number and what software version you have (see serial label).
2. Have your Technical Practice in front of you.
3. It is best if you are on site.

RETURNING PRODUCT FOR REPAIR

The following procedure is for equipment that needs repair:

1. Customer must contact Viking's Technical Support Department at 715-386-8666 to obtain a Return Authorization (RA) number. The customer MUST have a complete description of the problem, with all pertinent information regarding the defect, such as options set, conditions, symptoms, methods to duplicate problem, frequency of failure, etc.
2. Packing: Return equipment in original box or in proper packing so that damage will not occur while in transit. Static sensitive equipment such as a circuit board should be in an anti-static bag, sandwiched between foam and individually boxed. All equipment should be wrapped to avoid packing material lodging in or sticking to the equipment. Include ALL parts of the equipment. C.O.D. or freight collect shipments cannot be accepted. Ship cartons prepaid to: **Viking Electronics, 1531 Industrial Street, Hudson, WI 54016**
3. Return shipping address: Be sure to include your return shipping address inside the box. We cannot ship to a PO Box.
4. RA number on carton: In large printing, write the R.A. number on the outside of each carton being returned.

RETURNING PRODUCT FOR EXCHANGE

The following procedure is for equipment that has failed out-of-box (within 10 days of purchase):

1. Customer must contact Viking's Technical Support at 715-386-8666 to determine possible causes for the problem. The customer MUST be able to step through recommended tests for diagnosis.
2. If the Technical Support Product Specialist determines that the equipment is defective based on the customer's input and troubleshooting, a Return Authorization (R.A.) number will be issued. This number is valid for fourteen (14) calendar days from the date of issue.
3. After obtaining the R.A. number, return the approved equipment to your distributor, referencing the R.A. number. Your distributor will then replace the Viking product using the same R.A. number.
4. The distributor will NOT exchange this product without first obtaining the R.A. number from you. If you haven't followed the steps listed in 1, 2 and 3, be aware that you will have to pay a restocking charge.

TWO YEAR LIMITED WARRANTY

Viking warrants its products to be free from defects in the workmanship or materials, under normal use and service, for a period of two years from the date of purchase from any authorized Viking distributor. If at any time during the warranty period, the product is deemed defective or malfunctions, return the product to Viking Electronics, Inc., 1531 Industrial Street, Hudson, WI., 54016. Customer must contact Viking's Technical Support Department at 715-386-8666 to obtain a Return Authorization (R.A.) number.

This warranty does not cover any damage to the product due to lightning, over voltage, under voltage, accident, misuse, abuse, negligence or any damage caused by use of the product by the purchaser or others. This warranty does not cover non-EWP products that have been exposed to wet or corrosive environments. This warranty does not cover stainless steel surfaces that have not been properly maintained.

NO OTHER WARRANTIES. VIKING MAKES NO WARRANTIES RELATING TO ITS PRODUCTS OTHER THAN AS DESCRIBED ABOVE AND DISCLAIMS ANY EXPRESS OR IMPLIED WARRANTIES OR MERCHANTABILITY OR FITNESS FOR ANY PARTICULAR PURPOSE.

EXCLUSION OF CONSEQUENTIAL DAMAGES. VIKING SHALL NOT, UNDER ANY CIRCUMSTANCES, BE LIABLE TO PURCHASER, OR ANY OTHER PARTY, FOR CONSEQUENTIAL, INCIDENTAL, SPECIAL OR EXEMPLARY DAMAGES ARISING OUT OF OR RELATED TO THE SALE OR USE OF THE PRODUCT SOLD HEREUNDER.

EXCLUSIVE REMEDY AND LIMITATION OF LIABILITY. WHETHER IN AN ACTION BASED ON CONTRACT, TORT (INCLUDING NEGLIGENCE OR STRICT LIABILITY) OR ANY OTHER LEGAL THEORY, ANY LIABILITY OF VIKING SHALL BE LIMITED TO REPAIR OR REPLACEMENT OF THE PRODUCT, OR AT VIKING'S OPTION, REFUND OF THE PURCHASE PRICE AS THE EXCLUSIVE REMEDY AND ANY LIABILITY OF VIKING SHALL BE SO LIMITED.

IT IS EXPRESSLY UNDERSTOOD AND AGREED THAT EACH AND EVERY PROVISION OF THIS AGREEMENT WHICH PROVIDES FOR DISCLAIMER OF WARRANTIES, EXCLUSION OF CONSEQUENTIAL DAMAGES, AND EXCLUSIVE REMEDY AND LIMITATION OF LIABILITY, ARE SEVERABLE FROM ANY OTHER PROVISION AND EACH PROVISION IS A SEPARABLE AND INDEPENDENT ELEMENT OF RISK ALLOCATION AND IS INTENDED TO BE ENFORCED AS SUCH.

Product Support: (715) 386-8666

Due to the dynamic nature of the product design, the information contained in this document is subject to change without notice. Viking Electronics, and its affiliates and/or subsidiaries assume no responsibility for errors and omissions contained in this information. Revisions of this document or new editions of it may be issued to incorporate such changes.