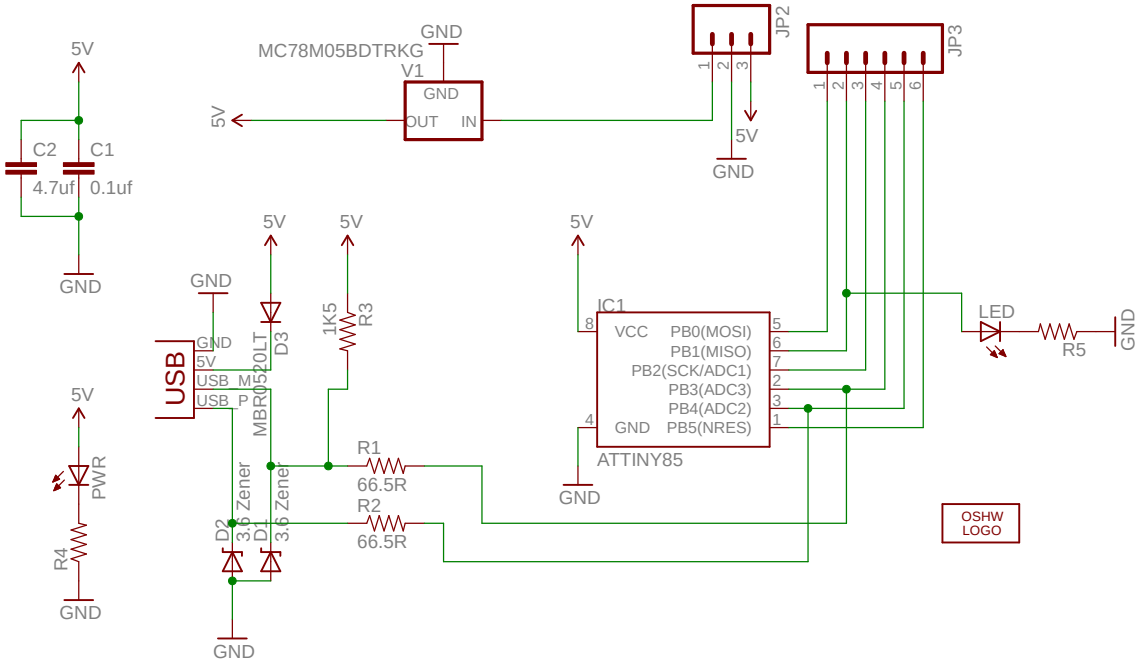

The Digispark design (schematic, layout, concept) is licensed under the Creative Commons Attribution-ShareAlike 3.0 Unported License: http://creativecommons.org/licenses/by-sa/3.0/

The Digispark and Digistump names and logos (or derivatives thereof) may not be used as part of the name of a product, company, or domain name without express written permission.

Digispark name. logo and Digistump name, logo Copyright 2013 Digistump LLC All Rights Reserved

For full details and license information please see http://digistump.com/wiki/digispark/policy

Created by Erik Kettenburg. Digistump LLC - digistump.com 2012