REV.	DATE	DESCRIPTION
A	10/25/99	UPDATE CONTACT PIN

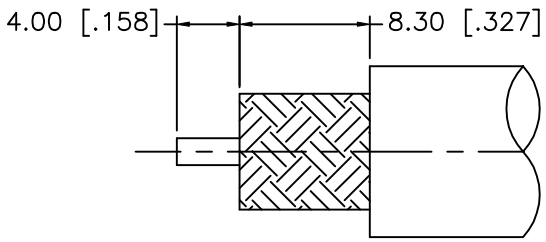

RECOMMENDED CABLE
STRIPPING DIMENSIONS

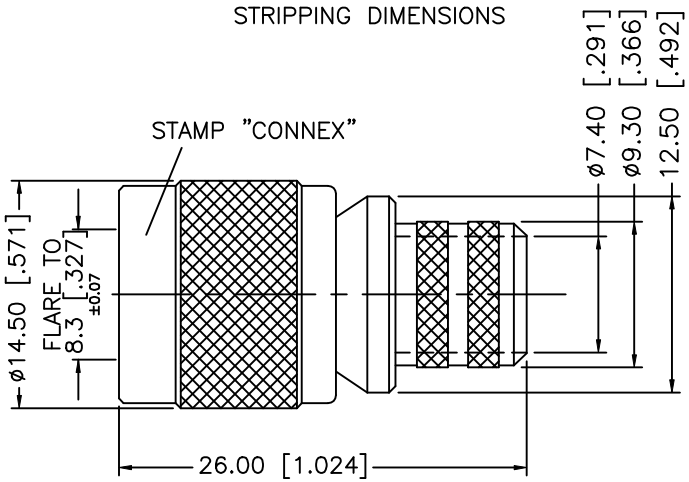

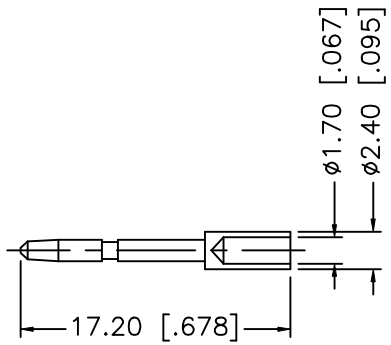

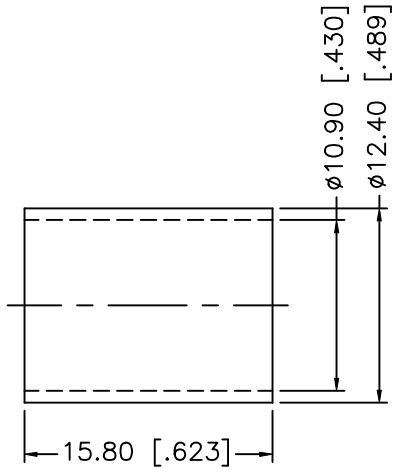

CRIMP NOTES:

1. CRIMPED FERRULE
   HEX CRIMP SIZE .429"
2. CRIMP CONTACT PIN
   HEX CRIMP SIZE .068"

	DESCRIPTION	MATERIAL	FINISH
1	BODY	BRASS	NICKEL
2	INSULATOR	TEFLON	NATURAL
3	CONTACT PIN	BRASS	GOLD
4	FERRULE	BRASS	NICKEL
5			
6			
7			
8			

UNLESS OTHERWISE SPECIFIED DIMENSIONS ARE IN MILLIMETERS

DIMENSIONS IN [ ] ARE IN INCHES FOR CUSTOMER REFERANCE ONLY

UNLESS OTHERWISE SPECIFIED TOLERANCES FOR MILLIMETERS ARE:

0.5–6 = ± 0.2
6–30 = ± 0.4
30–120 = ± 0.6
120–315 = ± 1
315–1000 = ± 1.6
1000–2000 = ± 2.4

DO NOT SCALE DRAWING

APPROVALS		DATE
DRAWN	G.R.S.	10/25/99
CHECKED		
ISSUED		

Amphenol - Connex
CONNECTOR CORPORATION

TITLE: TNC CRIMP PLUG (FOR BELDEN 9292, 8213, CABLE)

SIZE	FSCM NO.	DWG. NO.	REV.
A	99001	122470.DWG	NC

SCALE	PART NO.	SHEET
NA	122470	1 OF 1