REV.	DATE	DESCRIPTION
A	02/06/00	UPDATE DIMENSIONS – ADD SLEEVE
B	11/25/03	UPDATE DIMENSIONS

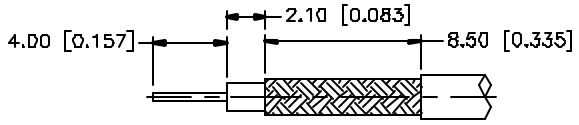

RECOMMENDED
CABLE STRIPPING DIM'S

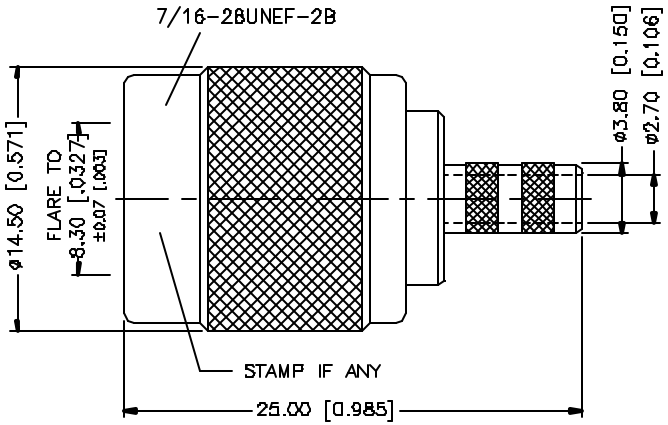

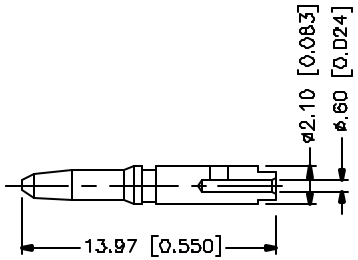

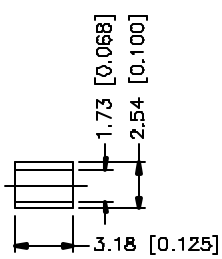

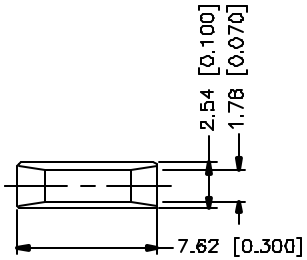

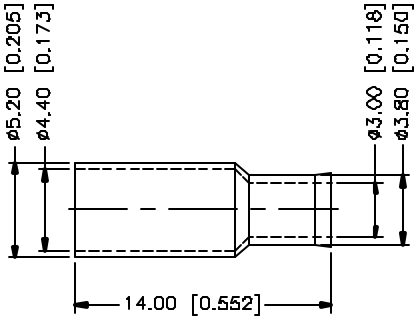

CRIMP NOTES:

1. CRIMPED FERRULE
   HEX SIZE .178"
2. CRIMPED CONTACT PIN
   HEX CRIMP SIZE .068"
3. VSWR 1.6 MAX. UP TO 3 Ghz

	DESCRIPTION	MATERIAL	FINISH	QTY
8				
7	FERRULE	BRASS	NICKEL	1
6	SPACER	BRASS	NICKEL	1
5	SLEEVE	TEFLON	NATURAL	1
4	RETAINER RING	BRASS	NICKEL	1
3	INSULATOR	TEFLON	NATURAL	1
2	CONTACT PIN	BRASS	GOLD	1
1	SHELL/BODY	BRASS	NICKEL	1

UNLESS OTHERWISE SPECIFIED DIMENSIONS ARE IN MILLIMETERS. DIMENSIONS IN [ ] ARE IN INCHES AND FOR CUSTOMER REFERENCE ONLY.

UNLESS OTHERWISE SPECIFIED TOLERANCES FOR MILLIMETERS ARE:
0.5 – 8mm ± 0.20mm
8 – 30mm ± 0.40mm
30 – 120mm ± 0.50mm

UNLESS OTHERWISE SPECIFIED TOLERANCES FOR INCHES ARE:
.020 – .315 = ± 0.007"
.315 – 1.180 = ± 0.015"
1.180 – 4.724 = ± 0.020"

DO NOT SCALE DRAWING

APPROVALS		DATE
DRAWN	G.R.S.	11/25/03
CHECKED		
ISSUED		
SHEET	1 OF 1	
CAD FILE	C:/122/122116.DWG	

Amphenol Connex

PART DESCRIPTION
TNC CRIMP PLUG
(FOR RG-174/U, 188A/U, 316/U CABLE)

PART NO. 122116

DWG. NO.	REV.	SIZE	SCALE
122116.DWG	B	A	NA