REV.	DATE	ECR NO.	DESCRIPTION
NC	04/03/09	XXXXXX	INITIAL RELEASE

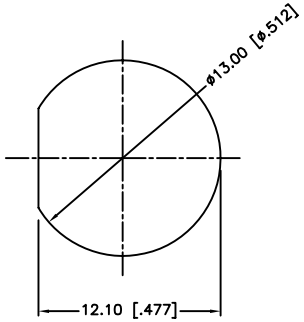

RECOMMENDED
MOUNTING HOLE

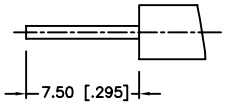

RECOMMENDED
CABLE STRIPPING DIM'S
SCALE 5.000

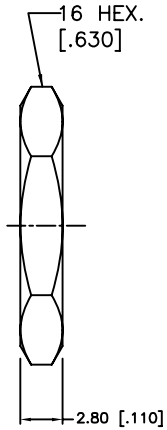

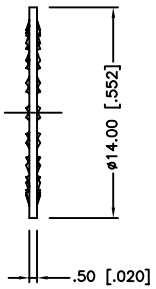

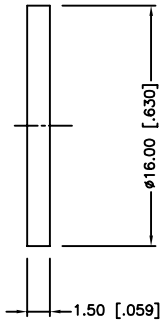

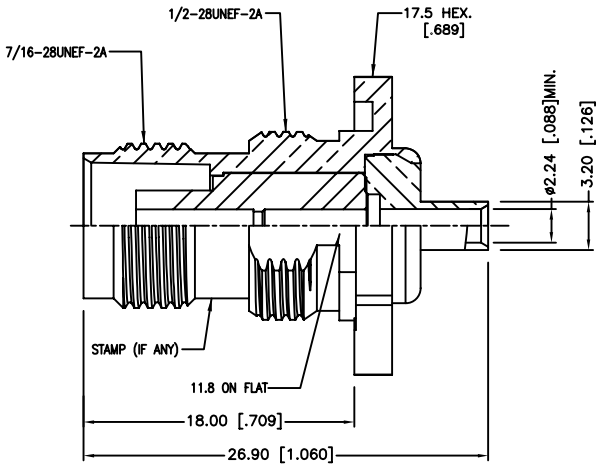

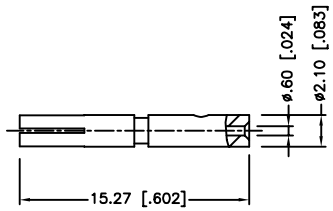

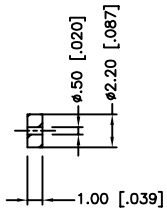

1. CRIMPED CONTACT PIN
   HEX CRIMP SIZE .068"
2. MAX. PANEL THICKNESS=3.5mm

	DESCRIPTION	MATERIAL	FINISH	QTY
8				
7	HEX NUT	BRASS	NICKEL	1
6	LOCK WASHER	BRASS	NICKEL	1
5	GASKET	SILICONE	RED	1
4	CONTACT PIN	PHOSPHOR BRONZE	GOLD	1
3	INSULATOR	PTFE	NATURAL	1
2	BODY REAR	BRASS	GOLD	1
1	BODY	BRASS	NICKEL	1

UNLESS OTHERWISE SPECIFIED DIMENSIONS ARE IN MILLIMETERS. DIMENSIONS IN [ ] ARE IN INCHES AND FOR CUSTOMER REFERANCE ONLY.

UNLESS OTHERWISE SPECIFIED TOLERANCES FOR MILLIMETERS ARE:
0.5 – 8mm ± 0.20mm
8 – 30mm ± 0.40mm
30 – 120mm ± 0.50mm

UNLESS OTHERWISE SPECIFIED TOLERANCES FOR INCHES ARE:
.020 – .315 = ± 0.007"
.315 – 1.180 = ± 0.015"
1.180 – 4.724 = ± 0.020"

DO NOT SCALE DRAWING

APPROVALS		DATE
DRAWN	C.WANG	04/08/09
CHECKED		
ISSUED		
SHEET	1 OF 1	

CAD FILE F:DWG\CONNEX\122400-10.DWG

Amphenol Connex

PART DESCRIPTION
TNC BULKHEAD DIRECT SOLDER JACK
(FOR .085",.086" CABLE)

PART NO. 122400-10

DWG. NO. 122400-10.DWG | REV. NC | SIZE A | SCALE NA