| REV. | DATE | DESCRIPTION |
|---|---|---|
| A | 10/28/99 | MODIFY BODY AND CONTACT DIMS |
| B | 01/13/03 | ADD INSULATOR / UPDATE DIMENSIONS |

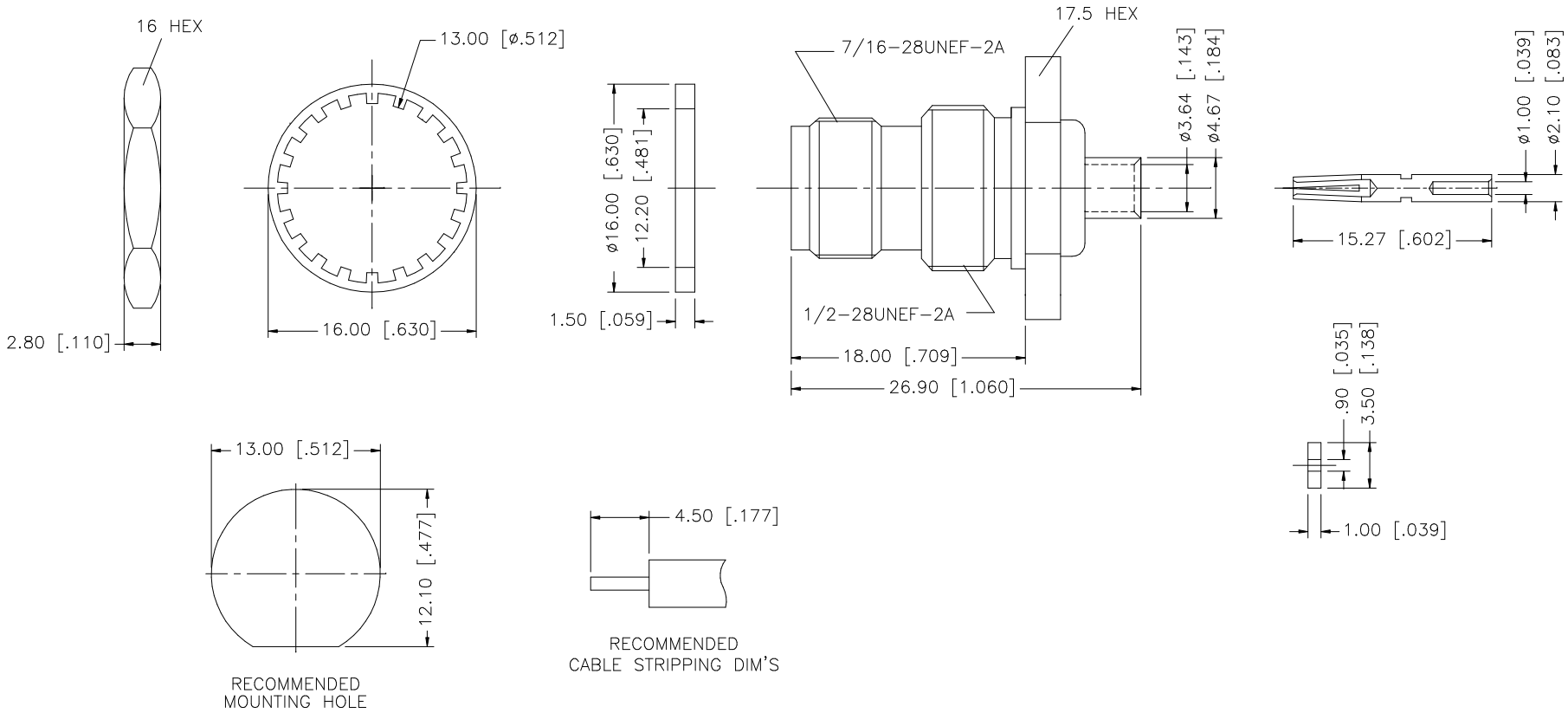


| | DESCRIPTION | MATERIAL | FINISH | QTY |
|---|---|---|---|---|
| 8 | GASKET | RUBBER | RED | 1 |
| 7 | LOCK WASHER | BRASS | NICKEL | 1 |
| 6 | HEX NUT | BRASS | NICKEL | 1 |
| 5 | BARREL | BRASS | GOLD | 1 |
| 4 | CONTACT PIN | PHOS. BRONZE | GOLD | 1 |
| 3 | INSULATOR | TEFLON | NATURAL | 2 |
| 2 | REAR BODY | BRASS | GOLD | 1 |
| 1 | BODY | BRASS | NICKEL | 1 |

UNLESS OTHERWISE SPECIFIED DIMENSIONS ARE IN MILLIMETERS. DIMENSIONS IN [ ] ARE IN INCHES AND FOR CUSTOMER REFERANCE ONLY.

UNLESS OTHERWISE SPECIFIED TOLERANCES FOR MILLIMETERS ARE:
0.5 – 8mm ± 0.20mm
8 – 30mm ± 0.40mm
30 – 120mm ± 0.50mm

UNLESS OTHERWISE SPECIFIED TOLERANCES FOR INCHES ARE:
.020 – .315 = ± 0.007"
.315 – 1.180 = ± 0.015"
1.180 – 4.724 = ± 0.020"

DO NOT SCALE DRAWING

| APPROVALS | | DATE |
|---|---|---|
| DRAWN | G.R.S. | 01/13/03 |
| CHECKED | | |
| ISSUED | | |
| SHEET | 1 OF 1 | |

CAD FILE C:/122/122401DWG

**Amphenol Connex**

PART DESCRIPTION
TNC BULKHEAD DIRECT SOLDER JACK
.141" SIMI RIGID CABLE

PART NO. 122401

| DWG. NO. | REV. | SIZE | SCALE |
|---|---|---|---|
| 122401.DWG | B | A | NA |