REV.	DATE	DESCRIPTION
NC	05/03/99	INITIAL RELEASE
A	03/20/05	REFORMAT DRAWING
B	11/29/05	MODIFY BARREL AND FERRULE I.D.

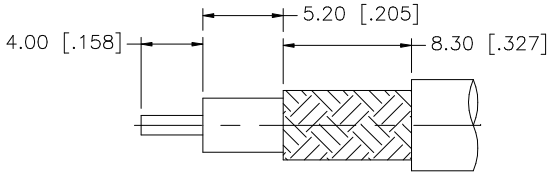

RECOMMENDED CABLE
STRIPPING DIMENSIONS

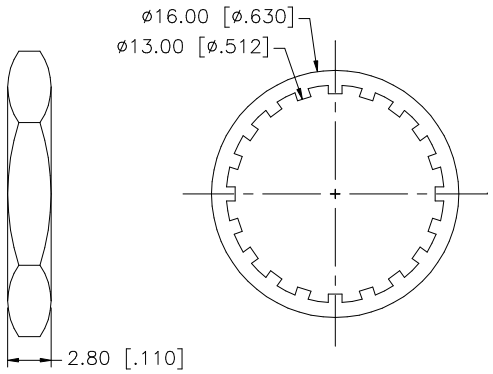

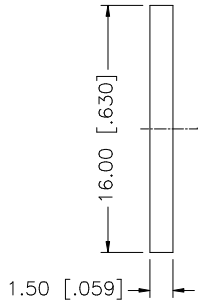

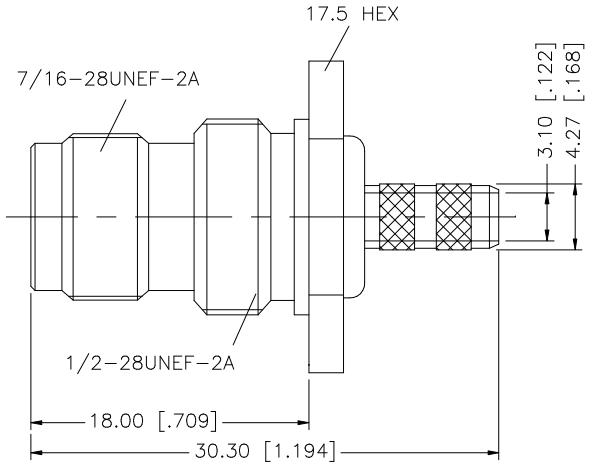

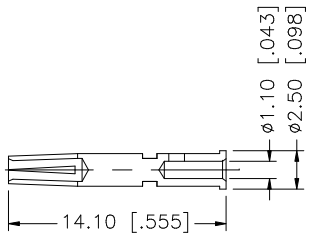

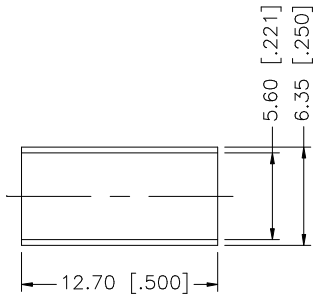

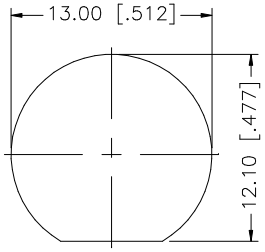

RECOMMENDED
MOUNTING HOLE

NOTE:

1. FERRULE HEX. CRIMP SIZE .213"
2. CONTACT PIN CRIMP SIZE .068"
3. MAX. PANEL THICKNESS= 3.5mm

	DESCRIPTION	MATERIAL	FINISH	QTY
8				
7	FERRULE	COPPER	NICKEL	1
6	GASKET	SILICONE	RUBBER	1
5	HEX NUT	BRASS	NICKEL	1
4	LOCKWASHER	BRASS	NICKEL	1
3	CONTACT PIN	PHOS. BRONZE	GOLD	1
2	INSULATOR	TEFLON	NATURAL	1
1	BODY	BRASS	NICKEL	1

UNLESS OTHERWISE SPECIFIED DIMENSIONS ARE IN MILLIMETERS. DIMENSIONS IN [ ] ARE IN INCHES AND FOR CUSTOMER REFERANCE ONLY.

UNLESS OTHERWISE SPECIFIED TOLERANCES FOR MILLIMETERS ARE:
0.5 – 8mm ± 0.20mm
8 – 30mm ± 0.40mm
30 – 120mm ± 0.50mm

UNLESS OTHERWISE SPECIFIED TOLERANCES FOR INCHES ARE:
.020 – .315 = ± 0.007"
.315 – 1.180 = ± 0.015"
1.180 – 4.724 = ± 0.020"

DO NOT SCALE DRAWING

APPROVALS		DATE
DRAWN	G.R.S.	11/29/05
CHECKED		
ISSUED		
SHEET	1 OF 1	
CAD FILE	C:/122/122363.DWG	

Amphenol Connex

PART DESCRIPTION
TNC BULKHEAD CRIMP JACK
(FOR RG–142/U, 223/U, 400/U CABLE)

PART NO. 122363

DWG. NO. 122363.DWG | REV. B | SIZE A | SCALE NA