REV.	DATE	DESCRIPTION
NC	10/25/99	INITIAL RELEASE
A	07/20/05	UPDATE DRAWING FORMAT
B	06/29/06	REVISE PLATING TO NEXCOTE

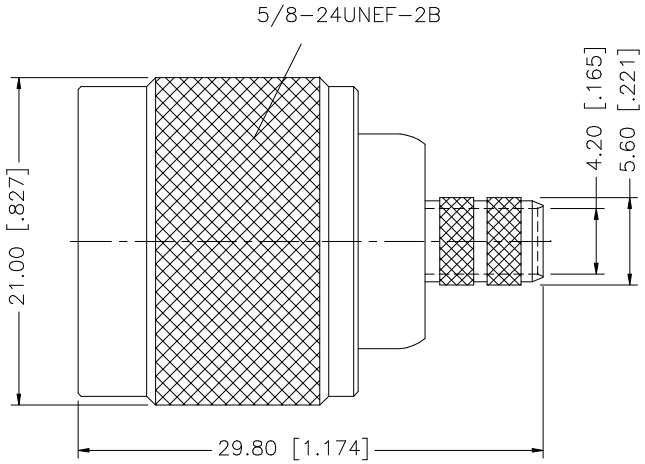

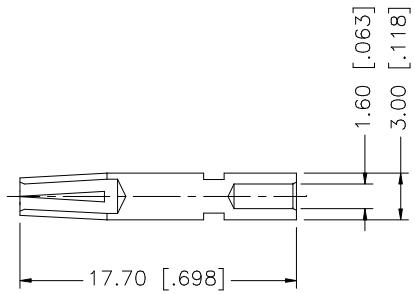

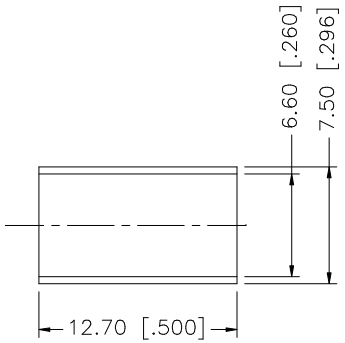

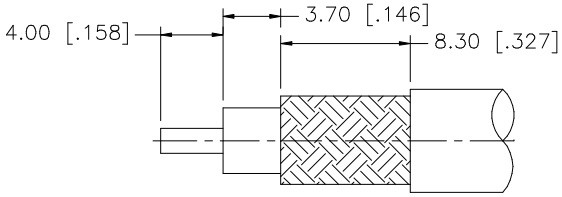

RECOMMENDED
CABLE STRIPPING DIM'S

	DESCRIPTION	MATERIAL	FINISH	QTY
8				
7				
6				
5				
4	FERRULE	COPPER	NICKEL	1
3	CONTACT PIN	PHOS. BRONZE	GOLD	1
2	INSULATOR	TEFLON	NATURAL	1
1	BODY	BRASS	NEXCOTE	1

UNLESS OTHERWISE SPECIFIED DIMENSIONS ARE IN MILLIMETERS. DIMENSIONS IN [ ] ARE IN INCHES AND FOR CUSTOMER REFERANCE ONLY.

UNLESS OTHERWISE SPECIFIED TOLERANCES FOR MILLIMETERS ARE:
0.5 – 8mm ± 0.20mm
8 – 30mm ± 0.40mm
30 – 120mm ± 0.50mm

UNLESS OTHERWISE SPECIFIED TOLERANCES FOR INCHES ARE:
.020 – .315 = ± 0.007"
.315 – 1.180 = ± 0.015"
1.180 – 4.724 = ± 0.020"

DO NOT SCALE DRAWING

APPROVALS		DATE
DRAWN	G.R.S.	06/29/06
CHECKED		
ISSUED		
SHEET	1 OF 1	

CAD FILE C:/172/172135RP.DWG

Amphenol Connex

PART DESCRIPTION
N REVERSE POLARITY CRIMP PLUG
(FOR 8X/ LMR 240 CABLE)

PART NO. 172135RP

DWG. NO. 172135RP.DWG | REV. B | SIZE A | SCALE NA