REV.	DATE	DESCRIPTION
NC	09/11/98	INITIAL RELEASE
A	05/01/04	UPDATE DRAWING FORMAT

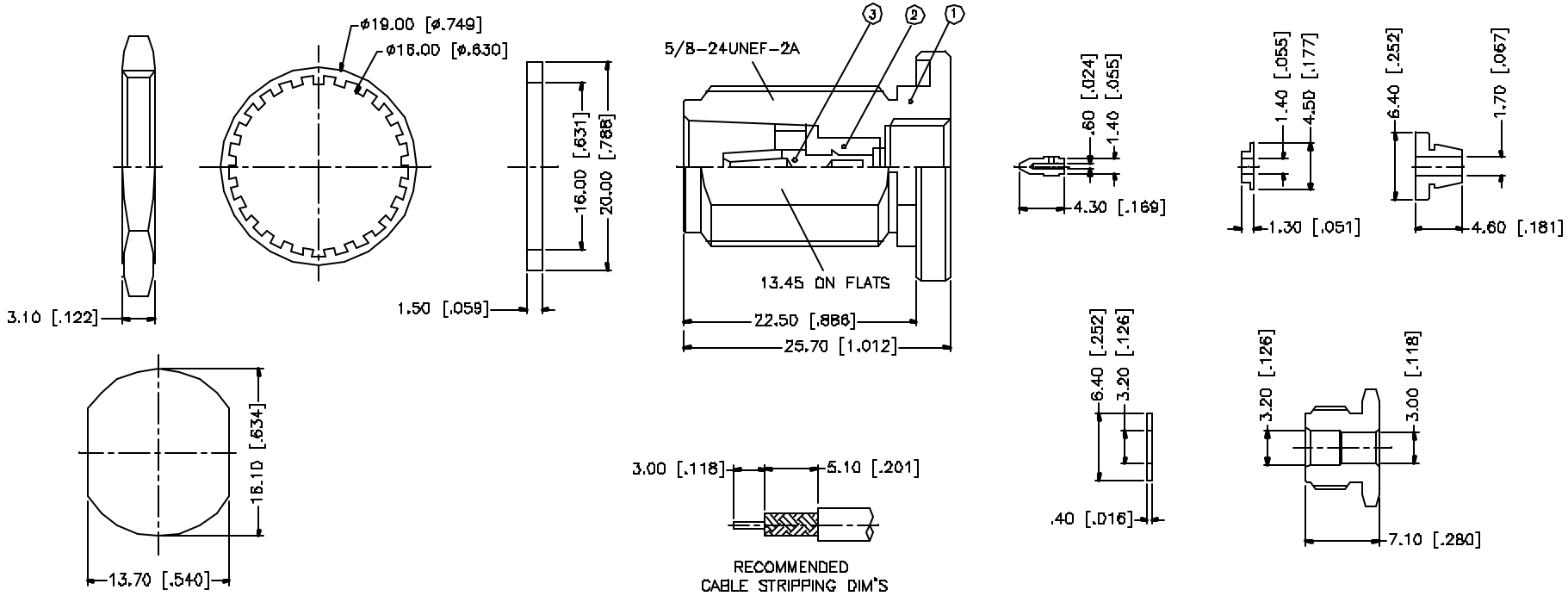

NOTE:

1. CONTACT PIN TO SOLDER
2. MAX. PANEL THICKNESS =6.5mm

12				
11	HEX NUT	BRASS	NEXCOTE	1
10	WASHER	BRASS	NEXCOTE	1
9	TOP HAT	BRASS	NEXCOTE	1
8	INSULATOR	TEFLON	NATURAL	1
7	CONTACT PIN	BRASS	GOLD	1
6	HEX NUT	BRASS	NEXCOTE	1
5	LOCK WASHER	BRASS	NEXCOTE	1
4	GASKET	SILICONE	RED	1
3	CONTACT PIN	BER. COPPER	GOLD	1
2	INSULATOR	TEFLON	NATURAL	1
1	BODY	BRASS	NEXCOTE	1
	DESCRIPTION	MATERIAL	FINISH	QTY

UNLESS OTHERWISE SPECIFIED DIMENSIONS ARE IN MILLIMETERS. DIMENSIONS IN [ ] ARE IN INCHES AND FOR CUSTOMER REFERENCE ONLY.

UNLESS OTHERWISE SPECIFIED TOLERANCES FOR MILLIMETERS ARE:
0.5 – 8mm ± 0.20mm
8 – 30mm ± 0.40mm
30 – 120mm ± 0.50mm

UNLESS OTHERWISE SPECIFIED TOLERANCES FOR INCHES ARE:
.020 – .315 = ± 0.007"
.315 – 1.180 = ± 0.015"
1.180 – 4.724 = ± 0.020"

DO NOT SCALE DRAWING

APPROVALS		DATE
DRAWN	G.R.S.	05/01/04
CHECKED		
ISSUED		
SHEET	1 OF 1	

CAD FILE C:/172/172143-10.DWG

Amphenol Connex

PART DESCRIPTION
N BULKHEAD CLAMP JACK
(FOR RG-174/U,188A/U,316/U)

PART NO. 172143-10

DWG. NO.	REV.	SIZE	SCALE
172143-10.DWG	A	A	NA