REV.	DATE	DESCRIPTION
A	12/16/04	UPDATE BARREL LENGTH TO 14.1mm
B	05/22/05	MODIFY PLATING SPEC

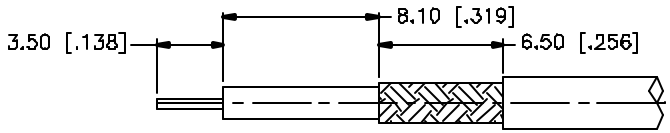

RECOMMENDED CABLE
STRIPPING DIMENSIONS

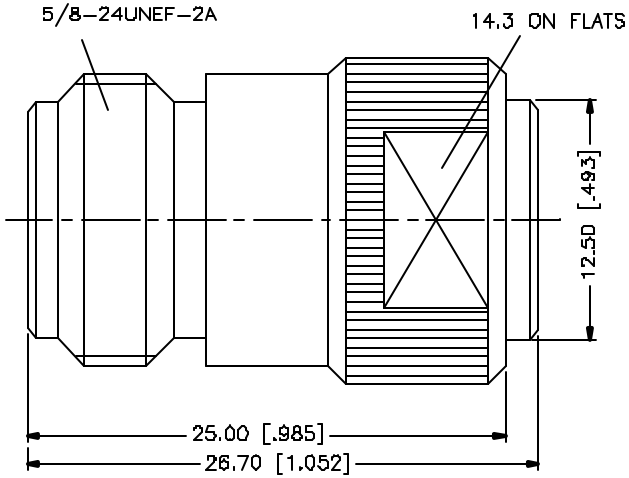

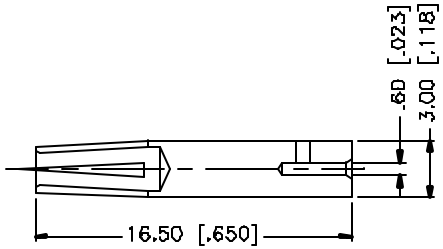

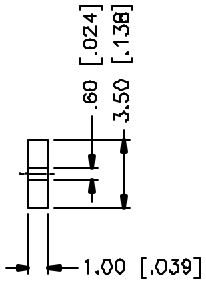

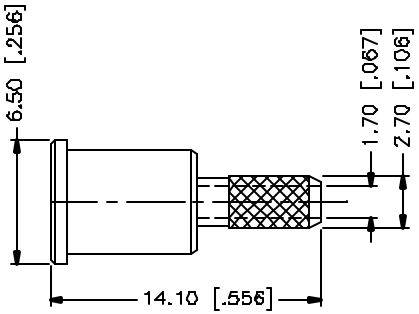

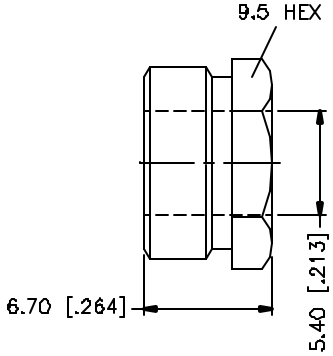

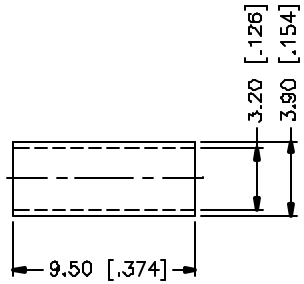

	DESCRIPTION	MATERIAL	FINISH	QTY
8				
7				
6	FERRULE	COPPER	NEXCOTE	1
5	HEX NUT	BRASS	NEXCOTE	1
4	BARREL	BRASS	NEXCOTE	1
3	CONTACT PIN	PHOS. BRONZE	GOLD	1
2	INSULATOR	TEFLON	NATURAL	1
1	BODY	BRASS	NEXCOTE	1

UNLESS OTHERWISE SPECIFIED DIMENSIONS ARE IN MILLIMETERS. DIMENSIONS IN [ ] ARE IN INCHES AND FOR CUSTOMER REFERENCE ONLY.

UNLESS OTHERWISE SPECIFIED TOLERANCES FOR MILLIMETERS ARE:
0.5 – 8mm ± 0.20mm
8 – 30mm ± 0.40mm
30 – 120mm ± 0.50mm

UNLESS OTHERWISE SPECIFIED TOLERANCES FOR INCHES ARE:
.020 – .315 = ± 0.007"
.315 – 1.180 = ± 0.015"
1.180 – 4.724 = ± 0.020"

DO NOT SCALE DRAWING

APPROVALS		DATE
DRAWN	G.R.S.	05/22/05
CHECKED		
ISSUED		
SHEET	1 OF 1	

CAD FILE C:/172/172204.DWG

Amphenol Connex

PART DESCRIPTION
N STRAIGHT CRIMP JACK
(FOR RG-174/U, 188A/U, 316/U)

PART NO. 172204

DWG. NO. 172204.DWG | REV. B | SIZE A | SCALE NA