REV.	DATE	DESCRIPTION
A	01/06/03	UPDATE DRAWING FORMAT

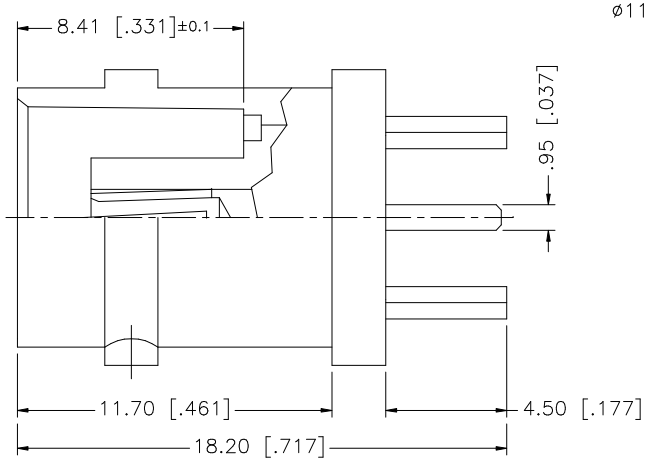

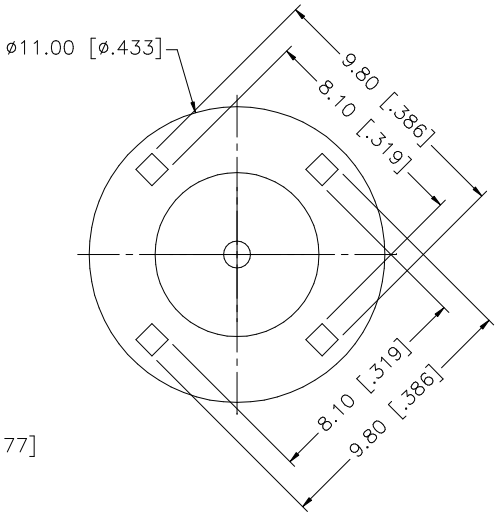

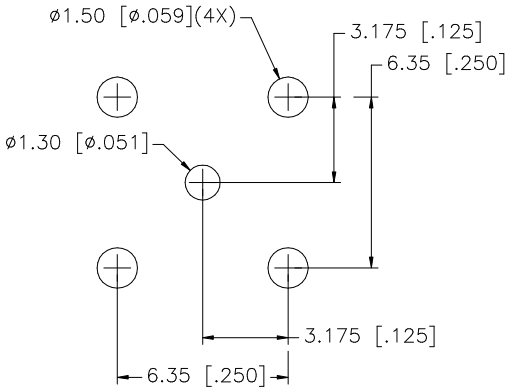

PCB MOUNTING HOLE

	DESCRIPTION	MATERIAL	FINISH	QTY
4	LOCK RING	BRASS	NICKEL	1
3	CONTACT PIN	PHOS. BRONZE	GOLD	1
2	INSULATOR	TEFLON	NATURAL	1
1	BODY	BRASS	NICKEL	1

UNLESS OTHERWISE SPECIFIED DIMENSIONS ARE IN MILLIMETERS. DIMENSIONS IN [ ] ARE IN INCHES AND FOR CUSTOMER REFERANCE ONLY.

UNLESS OTHERWISE SPECIFIED TOLERANCES FOR MILLIMETERS ARE:
0.5 – 8mm ± 0.20mm
8 – 30mm ± 0.40mm
30 – 120mm ± 0.50mm

UNLESS OTHERWISE SPECIFIED TOLERANCES FOR INCHES ARE:
.020 – .315 = ± 0.007"
.315 – 1.180 = ± 0.015"
1.180 – 4.724 = ± 0.020"

DO NOT SCALE DRAWING

APPROVALS		DATE
DRAWN	G.R.S.	01/06/03
CHECKED		
ISSUED		
SHEET	1 OF 1	
CAD FILE	C:/112/112404.DWG	

Amphenol Connex

PART DESCRIPTION
BNC P.C. MOUNT RECEPT. JACK
50 ohm TF–4 POST

PART NO. 112404

DWG. NO. 112404.DWG | REV. A | SIZE A | SCALE NA