REV.	DATE	DESCRIPTION
NC	04/11/02	INITIAL RELEASE
A	12/11/07	REVISE CONTACT PIN MATERIAL / UPDATE DRAWING FORMAT

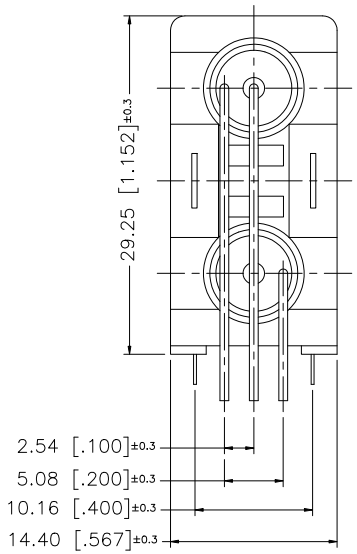

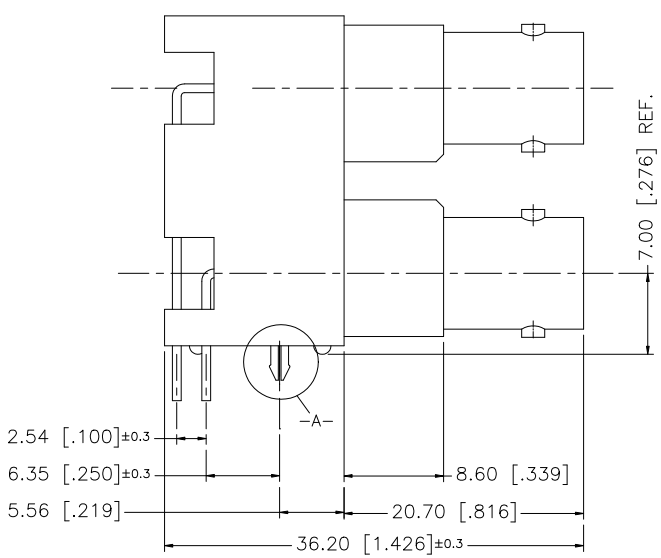

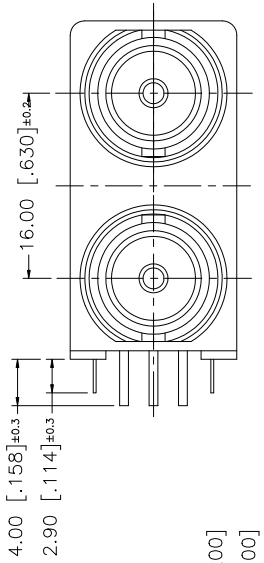

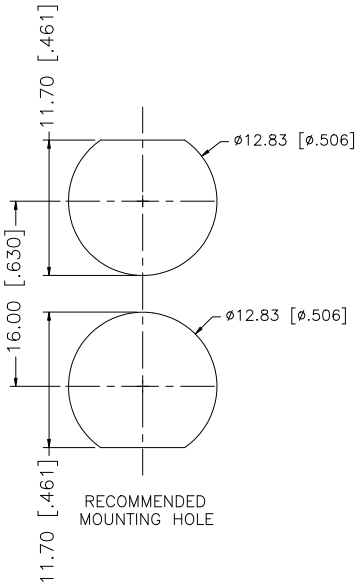

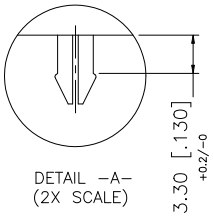

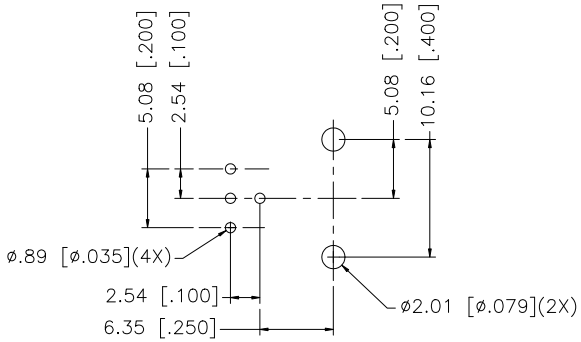

PCB MOUNTING HOLE

	DESCRIPTION	MATERIAL	FINISH	QTY
8	MOUNTING POST	BRASS	BRT. TIN	1
7	POST	COPPER	BRT. TIN	1
6	POST	COPPER	BRT. TIN	1
5	HOUSING	PBT	RED	1
4	CONTACT PIN	PHOS. BRONZE	BRT. TIN	1
3	CONTACT PIN	PHOS. BRONZE	BRT. TIN	1
2	INSULATOR	POLY PRO	NATURAL	1
1	BODY	ZINC DIE CAST	NICKEL	1

UNLESS OTHERWISE SPECIFIED DIMENSIONS ARE IN MILLIMETERS. DIMENSIONS IN [ ] ARE IN INCHES AND FOR CUSTOMER REFERANCE ONLY.

UNLESS OTHERWISE SPECIFIED TOLERANCES FOR MILLIMETERS ARE:
0.5 – 8mm ± 0.20mm
8 – 30mm ± 0.40mm
30 – 120mm ± 0.50mm

UNLESS OTHERWISE SPECIFIED TOLERANCES FOR INCHES ARE:
.020 – .315 = ± 0.007"
.315 – 1.180 = ± 0.015"
1.180 – 4.724 = ± 0.020"

DO NOT SCALE DRAWING

APPROVALS		DATE
DRAWN	G.R.S.	12/11/07
CHECKED		
ISSUED		
SHEET	1 OF 1	
CAD FILE	C:/112/112705.DWG	

Amphenol Connex

PART DESCRIPTION
DUAL PORT BNC R/A PCB
MOUNT RECEPTACLE – BLACK 50ohm

PART NO. 112705

DWG. NO. 112705.DWG | REV. A | SIZE A | SCALE NA