REV.	DATE	ECR NO	DESCRIPTION
A	03/21/04	--	UPDATE DRAWING FORMAT/ MODIFY BODY
B	06/28/07	--	REVISE BACK HOUSING SHOWING CONTACT PINS CAPTIVATED
C	02/05/10	2012	HARDWARES REMOVED

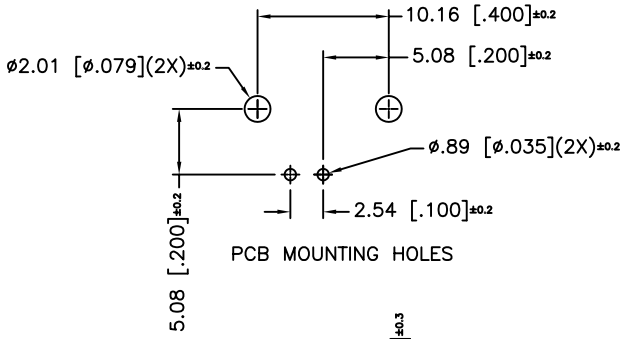

PCB MOUNTING HOLES

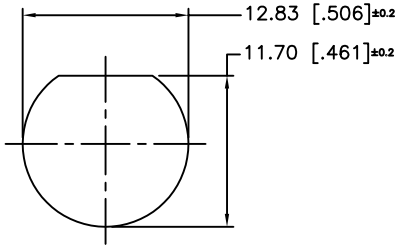

RECOMMENDED MOUNTING HOLE

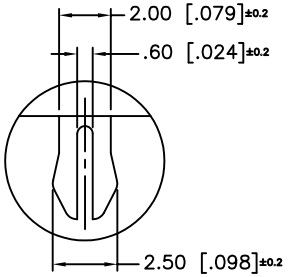

DETAIL –A–
(2X SCALE)

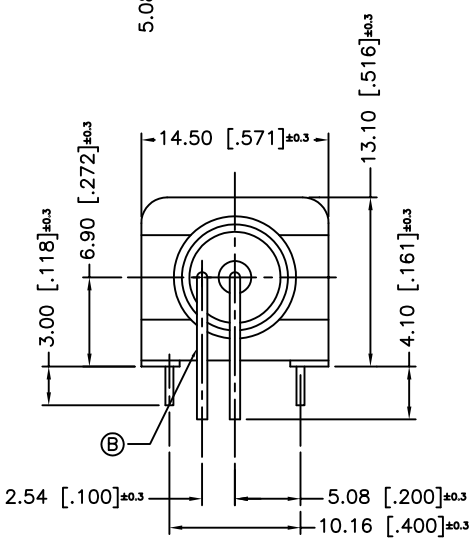

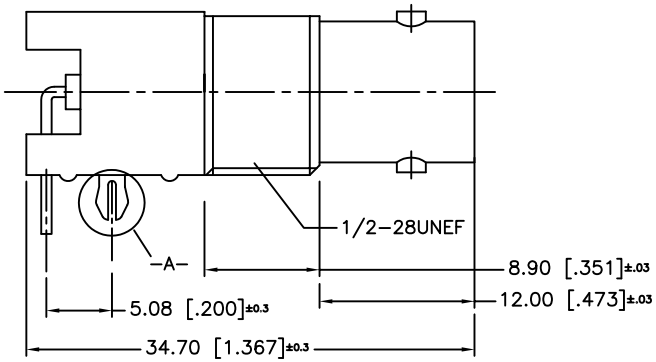

NOTE:

1. MAX. PANEL THICKNESS = 5mm

	DESCRIPTION	MATERIAL	FINISH	QTY
5	MOUNTING POST	BRASS	TIN PLATE	1
4	CONTACT PIN	PHOS. BRONZE	GOLD	1
3	INSULATOR	P.P.	NATURAL	1
2	BODY	ZINC DIE CAST	NICKEL	1
1	HOUSING	P.B.T.	WHITE	1

UNLESS OTHERWISE SPECIFIED DIMENSIONS ARE IN MILLIMETERS. DIMENSIONS IN [ ] ARE IN INCHES AND FOR CUSTOMER REFERANCE ONLY.

UNLESS OTHERWISE SPECIFIED TOLERANCES FOR MILLIMETERS ARE:
0.5 – 8mm ± 0.20mm
8 – 30mm ± 0.40mm
30 – 120mm ± 0.50mm

UNLESS OTHERWISE SPECIFIED TOLERANCES FOR INCHES ARE:
.020 – .315 = ± 0.007"
.315 – 1.180 = ± 0.015"
1.180 – 4.724 = ± 0.020"

DO NOT SCALE DRAWING

APPROVALS		DATE
DRAWN	CLEMENT	02/05/10
CHECKED		
ISSUED		
SHEET	1 OF 1	
CAD FILE	C:/112/112417.DWG	

Amphenol Connex

PART DESCRIPTION: BNC R/A PC MOUNT RECEPT. JACK

PART NO. 112417

DWG. NO. 112417.DWG | REV. C | SIZE A | SCALE NA