REV.	DATE	DESCRIPTION
A	05/21/10	RELEASE TO MFG.

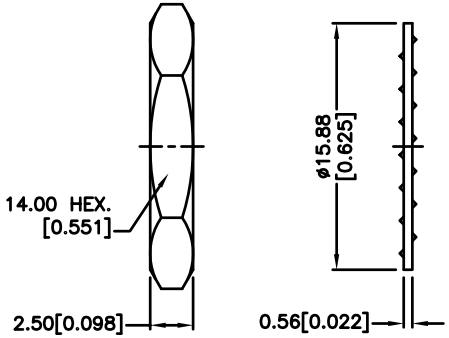

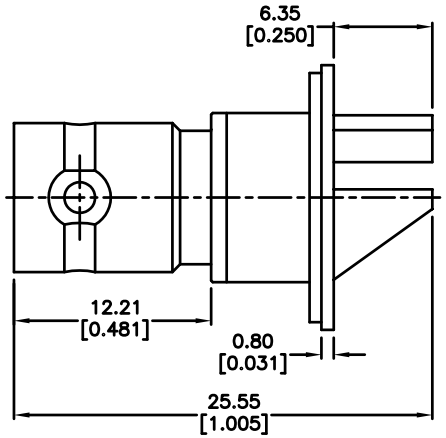

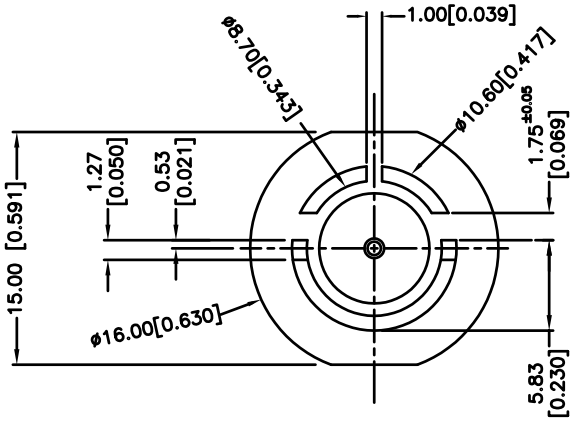

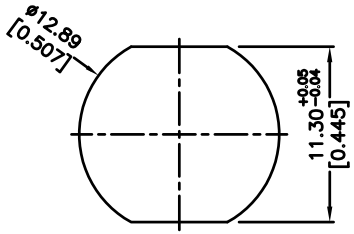

RECOMMENDED
MOUNTING HOLE DIMENSIONS

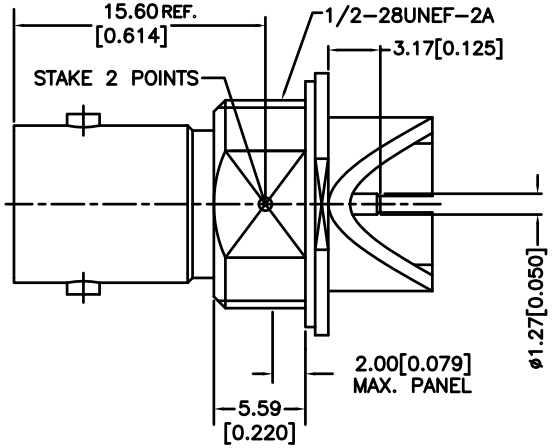

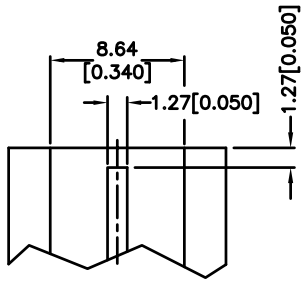

RECOMMENDED
PCB LAYOUT

NO	DESCRIPTION	MATERIAL	FINISH	QTY
8	HEX NUT	BRASS	NICKEL	1
7	LOCK WASHER	BRASS	NICKEL	1
6	BODY	BRASS	GOLD	1
5	INSULATOR	TEFLON	NATURAL	1
4	HOUSING	BRASS	GOLD	1
3	CONTACT PIN	PHOSPHOR BRONZE	GOLD	1
2	INSULATOR	TEFLON	NATURAL	1
1	BODY	BRASS	GOLD	1

UNLESS OTHERWISE SPECIFIED DIMENSIONS ARE IN MILLIMETERS. DIMENSIONS IN [ ] ARE IN INCHES AND FOR CUSTOMER REFERENCE ONLY.

UNLESS OTHERWISE SPECIFIED TOLERANCES FOR MILLIMETERS ARE:
0.5 – 8mm ± 0.20mm
8 – 30mm ± 0.40mm
30 – 120mm ± 0.50mm

UNLESS OTHERWISE SPECIFIED TOLERANCES FOR INCHES ARE:
.020 – .315 = ± 0.007"
.315 – 1.180 = ± 0.015"
1.180 – 4.724 = ± 0.020"

DO NOT SCALE DRAWING

APPROVALS		DATE
DRAWN	CLEMENT	05/21/10
CHECKED		
ISSUED		
SHEET	1 OF 1	

CAD FILE C:\112\112806-75.DWG

AMPHENOL CONNEX

PART DESCRIPTION
BNC ISOLATED,END LAUNCH RECEPT.JACK

PART NO. 112806-75

DWG. NO. 112806-75.DWG | REV. A | SIZE A | SCALE NA