REV.	DATE	DESCRIPTION
NC	10/05/99	INITIAL RELEASE
A	07/29/06	UPDATE DRAWING FORMAT

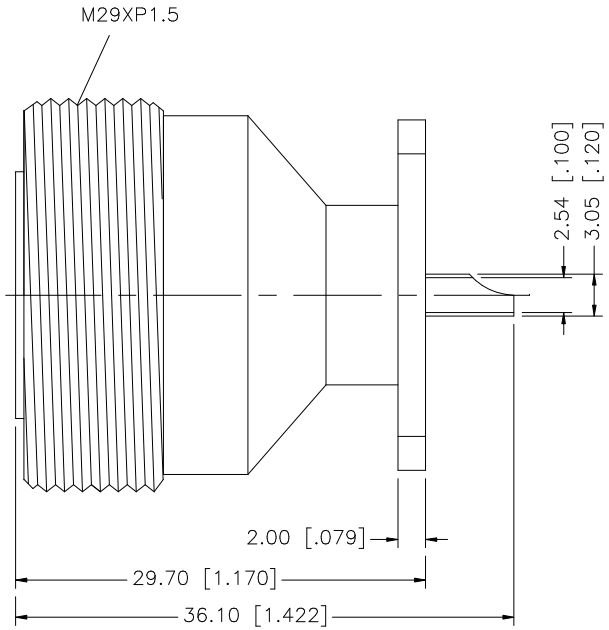

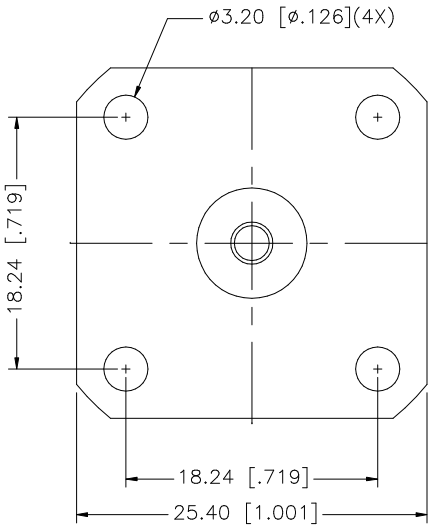

8				
7				
6				
5	COVER	P.E.	BLUE	1
4	NUT	BRASS	NEXCOTE	1
3	CONTACT PIN	BER. COPPER	SILVER	1
2	INSULATOR	TEFLON	NATURAL	1
1	BODY	BRASS	NEXCOTE	1
	DESCRIPTION	MATERIAL	FINISH	QTY

UNLESS OTHERWISE SPECIFIED DIMENSIONS ARE IN MILLIMETERS. DIMENSIONS IN [ ] ARE IN INCHES AND FOR CUSTOMER REFERANCE ONLY.

UNLESS OTHERWISE SPECIFIED TOLERANCES FOR MILLIMETERS ARE:
0.5 – 8mm ± 0.20mm
8 – 30mm ± 0.40mm
30 – 120mm ± 0.50mm

UNLESS OTHERWISE SPECIFIED TOLERANCES FOR INCHES ARE:
.020 – .315 = ± 0.007"
.315 – 1.180 = ± 0.015"
1.180 – 4.724 = ± 0.020"

DO NOT SCALE DRAWING

APPROVALS		DATE
DRAWN	G.R.S.	07/29/06
CHECKED		
ISSUED		
SHEET	1 OF 1	
CAD FILE	C:/272/272173.DWG	

Amphenol Connex

PART DESCRIPTION
7/16 PANEL RECEPTACLE JACK
–

PART NO. 272173

DWG. NO.	REV.	SIZE	SCALE
272173.DWG	A	A	NA