REV.	DATE	DESCRIPTION
NC	01/09/03	INITIAL RELEASE

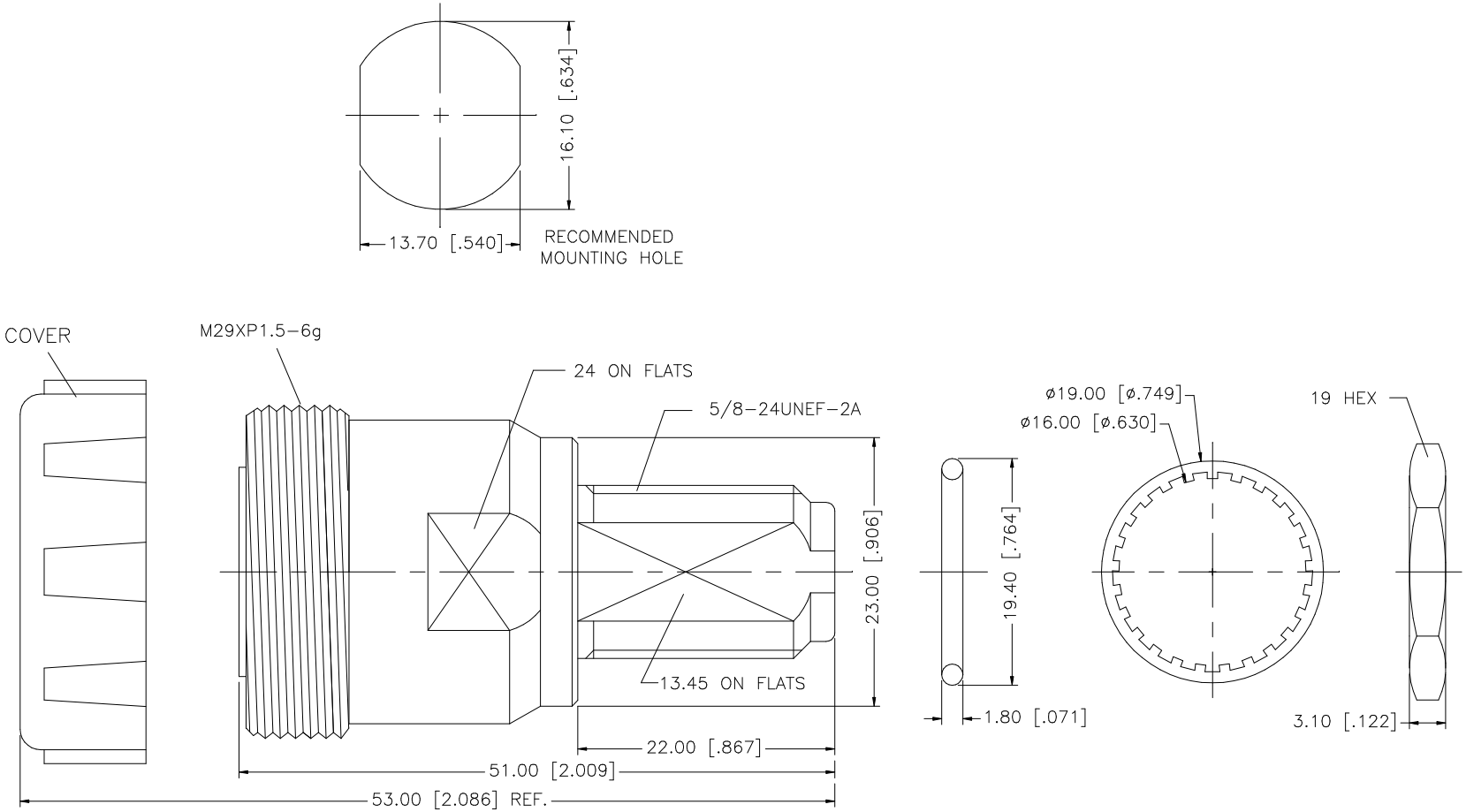

NOTE: MAX. PANEL THICKNESS = 6.5mm

	DESCRIPTION	MATERIAL	FINISH	QTY
8				
7	COVER	PE	BLUE	1
6	HEX NUT	BRASS	NEXCOTE	1
5	LOCK WASHER	BRASS	NEXCOTE	1
4	GASKET	SILICONE	RED	1
3	INSULATOR	TEFLON	NATURAL	1
2	CONTACT PIN	BER. COPPER	SILVER	1
1	HOUSING/BODY	BRASS	NEXCOTE	1

UNLESS OTHERWISE SPECIFIED DIMENSIONS ARE IN MILLIMETERS. DIMENSIONS IN [ ] ARE IN INCHES AND FOR CUSTOMER REFERANCE ONLY.

UNLESS OTHERWISE SPECIFIED TOLERANCES FOR MILLIMETERS ARE:
0.5 – 8mm ± 0.20mm
8 – 30mm ± 0.40mm
30 – 120mm ± 0.50mm

UNLESS OTHERWISE SPECIFIED TOLERANCES FOR INCHES ARE:
.020 – .315 = ± 0.007"
.315 – 1.180 = ± 0.015"
1.180 – 4.724 = ± 0.020"

DO NOT SCALE DRAWING

APPROVALS		DATE
DRAWN	G.R.S.	01/09/03
CHECKED		
ISSUED		
SHEET	1 OF 1	
CAD FILE	C:/272/272183.DWG	

Amphenol Connex

PART DESCRIPTION: N BULKHEAD JACK TO 7/16 JACK ADAPTER

PART NO. 272183

DWG. NO. 272183.DWG | REV. NC | SIZE A | SCALE NA