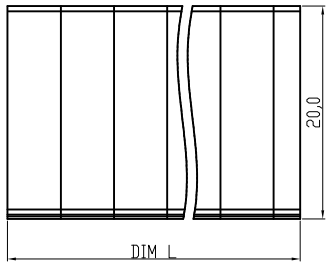

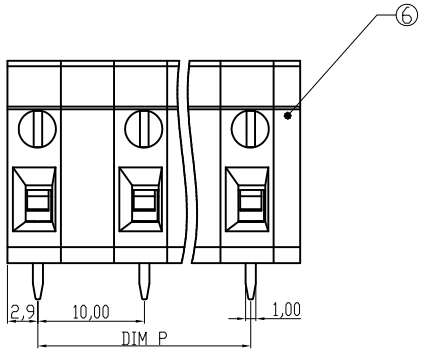

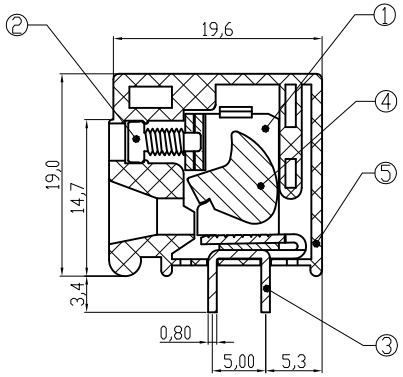

Material

①Terminal body(metal housing): steel stamping Zinc plating
②Terminal screw: Steel Zinc plating "-" slot type
③Solder pin: Brass,Tin plated
④Firm wire chunk: steel Zinc plating
⑤Terminal housing: Thermoplastic (UL94V-0) , GREEN
⑥Terminal cover:Thermoplastic(UL94V-0)

Electrical cULus

Voltage rating: 300VAC
Current rating: 20A
Wire range:
Solid wire(AWG): 12-22
Stranded wire(AWG): 12-22
Torque(Lb-In): 2.4
Screw: M2.5
Wire strip length: 10-11mm
Withstanding Voltage: 1.6KV
Operating temperature: -40°C to +115°C
Soldering temperature: 250°C±10°C/5 Sec
Safety Approval: c us

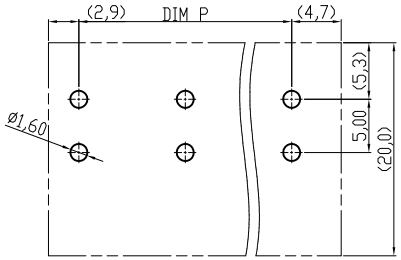

RECOMMENDER PCB LAYOUT

DIMENSION

L	Nx10.0-2.5
P	(N-1)x10.0

N=Number of poles

Poles	Tolerance	
	DIM L	DIM P
2p-4p	±0.20	±0.20
5p-8p	±0.30	±0.25
9p-12p	±0.40	±0.30

RoHS compliant

Scale	1:1
TOLERANCE	
X.	±0.50
X.X	±0.30
X.XX	±0.10
DIM	TOL
X.°	±1°
Angle	TOL

Id.	Modification	Date	Name
0	Drawn	19.04.2010	Alex

	Date	Name
Drawn	19.04.2010	Alex
Approved	19.04.2010	Hellwig

ASSMANN components

Customer-No.

ASSMANN WSW-No.
A-TB100-TRxxH

Drawing-No.
ASS 4097 CO

rev00

Replace

Sheet