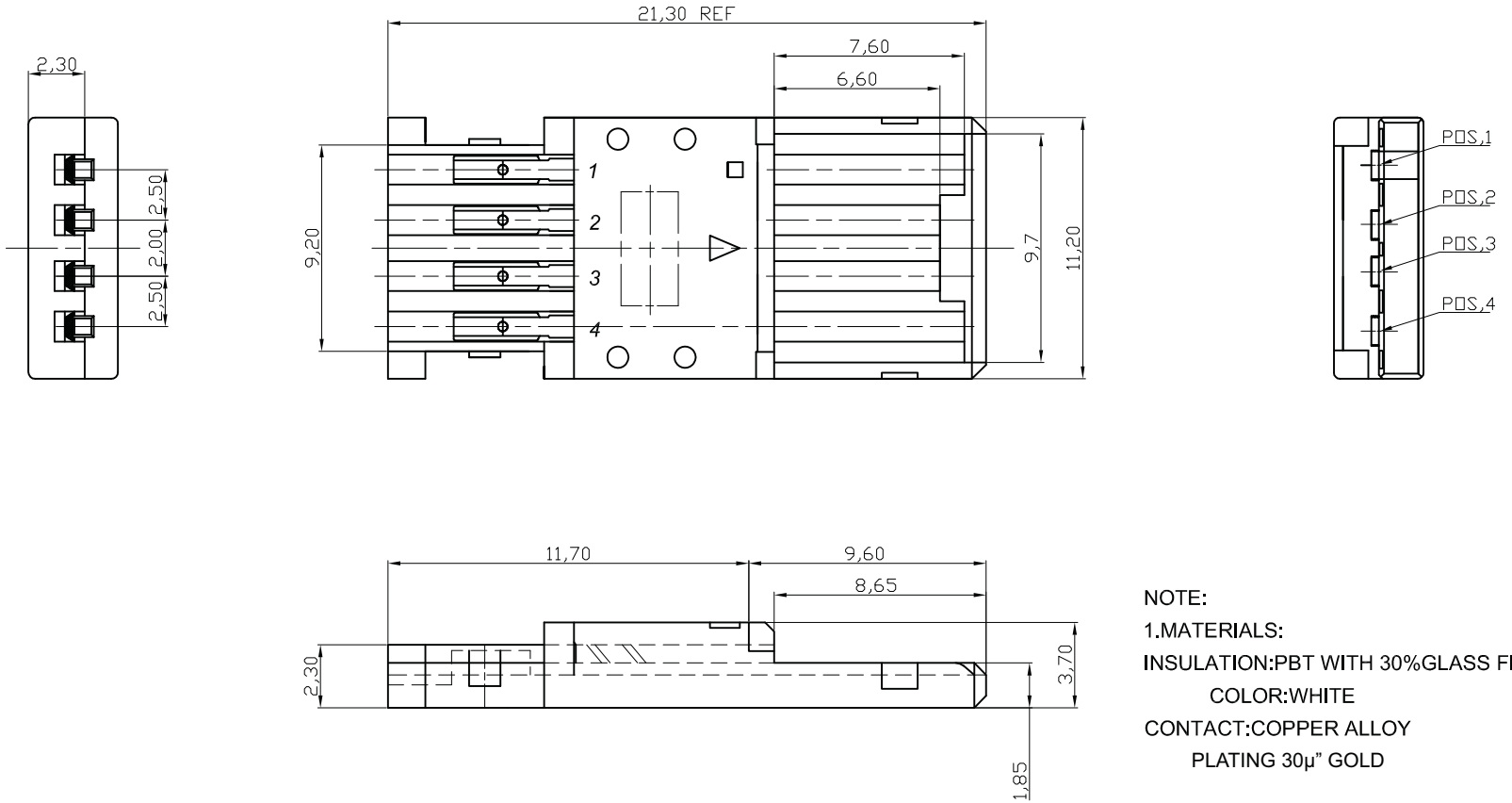

NOTE:
1.MATERIALS:
INSULATION:PBT WITH 30%GLASS FILLED , UL94V-0 RADTED
COLOR:WHITE
CONTACT:COPPER ALLOY
PLATING 30µ" GOLD

Unit: mm

RoHS Compliant

Scale	Free						Date	Name
TOLERANCE						Drawn	10.04.12	Miller
.XX	±0.10					Approved	12.02.13	Groll
.X	±0.20							
X.	±0.50							
XX.	±1							
DIM	TOL							
		1	Tooling modification	12.02.13	Wilson			
Angle	TOL	Id.	Modification	Date	Name			

ASSMANN WSW components
1840 W. Drake Drive, Suite 101 • Tempe, AZ 85283
Toll Free: 1-877-277-6266 • Email: info@assmann.us

Title

ASSMANN WSW-No.
A-USBPA-2-R

Drawing-No.

rev01

Replace

Sheet
1/4

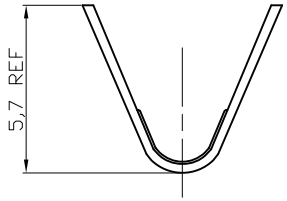

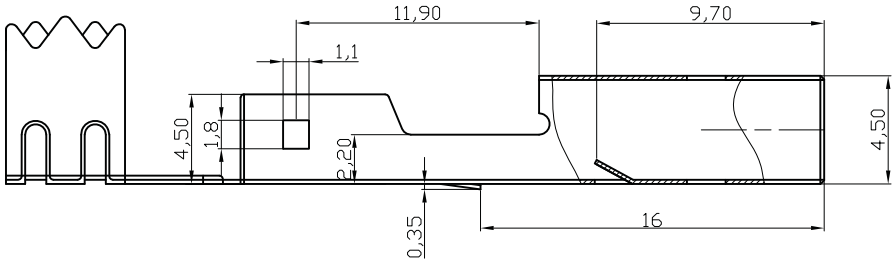

SECTION A-A

NOTE:
1.0.MATERIALS:
1.1.COLD ROLL STELL. t=0.35mm
2.0.FINISHES:
2.1.5.0um Min.BRIGHT TIN/LEAD(9:1) OVER 5.0um Min.COPPER
2.2.3.0um-5.0um NICKEL OVER 5.0um Min.COPPER
2.3.1.5u" Min.Au+80~150U".NICKEL+100U"Min.COPPER
2.4.3.0um-5.0um NICKEL OVER 5.0um Min.COPPER(SPECIAL PLATED)
④ 3.0. APPLICATION CABLE SPEC:

UL CSA Type	AWG Signal wires Power wires	Jacket OD.	Cable length(max.)
UL CM UL FT4	28AWG x 1T.P. 28AWG x 2Cores	4.2mm	0.81m
	28AWG x 1T.P. 26AWG x 2Cores	4.4mm	1.31m
	28AWG x 1T.P. 24AWG x 2Cores	4.7mm	2.08m
	28AWG x 1T.P. 22AWG x 2Cores	5.0mm	3.33m
	28AWG x 1T.P. 20AWG x 2Cores	5.0mm	5.00m

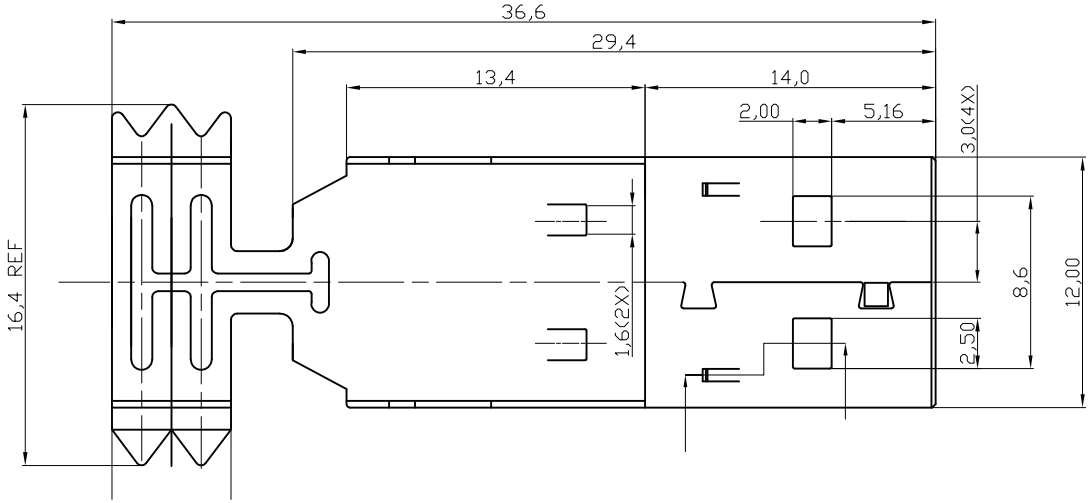

Unit: mm

RoHS Compliant

Scale	Free
TOLERANCE	
.XX	±0.10
.X	±0.20
X.	±0.50
XX.	±1
DIM	TOL
Angle	TOL

Id.	Modification	Date	Name
①	Tooling modification	12.02.13	Wilson

	Date	Name
Drawn	10.04.12	Miller
Approved	12.02.13	Groll

ASSMANN WSW components
1840 W. Drake Drive, Suite 101 • Tempe, AZ 85283
Toll Free: 1-877-277-6266 • Email: info@assmann.us

Title

ASSMANN WSW-No.
A-USBPA-2-R

Drawing-No.

rev01

Replace

Sheet 2/4

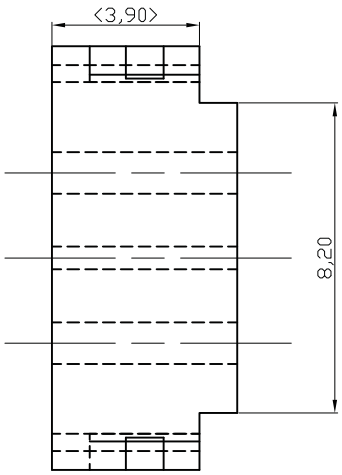

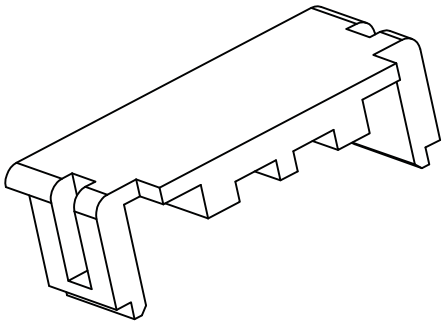

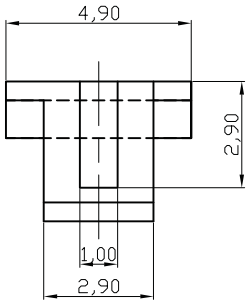

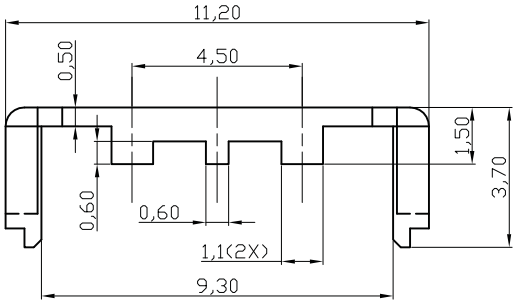

NOTE:

1.MATERIAL:PBT WITH 30%GLASS FILLED,UL 90V-0 RATED

Unit: mm

RoHS Compliant

Scale	Free
TOLERANCE	
.XX	±0.10
.X	±0.20
X.	±0.50
XX.	±1
DIM	TOL
Angle	TOL

Id.	Modification	Date	Name
1	Tooling modification	12.02.13	Wilson

	Date	Name
Drawn	10.04.12	Miller
Approved	12.02.13	Groll

ASSMANN WSW components

1840 W. Drake Drive, Suite 101 • Tempe, AZ 85283
Toll Free: 1-877-277-6266 • Email: info@assmann.us

Title

ASSMANN WSW-No.

A-USBPA-2-R

Drawing-No.

rev01

Replace

Sheet 3/4

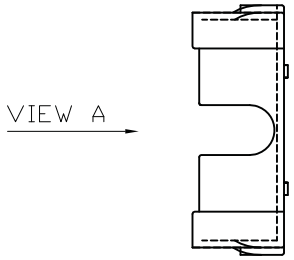

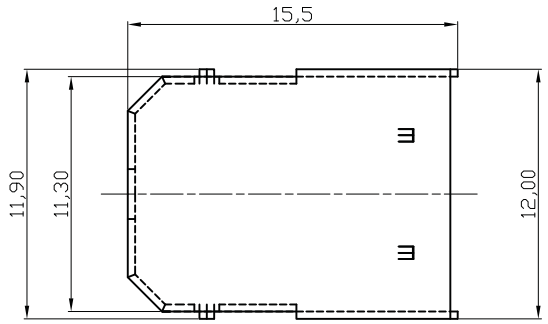

NOTE:
1.0.MATERIALS:
1.1.COLD ROLL STELL. t=0.35mm
2.0.FINISHES:
2.1.5.0um Min.BRIGHT TIN/LEAD(9:1) OVER 5.0um Min.COPPER
2.2.3.0um-5.0um NICKEL OVER 5.0um Min.COPPER
2.3.1.5u" Min.Au+80~150U".NICKEL+100U"Min.COPPER
2.4.3.0um-5.0um NICKEL OVER 5.0um Min.COPPER(SPECIAL PLATED)

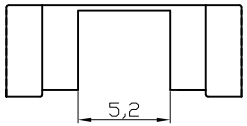

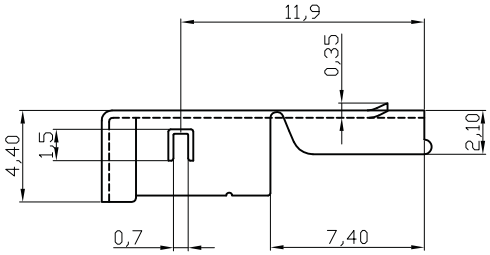

Unit: mm

RoHS Compliant

Scale	Free
TOLERANCE	
.XX	±0.10
.X	±0.20
X.	±0.50
XX.	±1
DIM	TOL
Angle	TOL

Id.	Modification	Date	Name
1	Tooling modification	12.02.13	Wilson

	Date	Name
Drawn	10.04.12	Miller
Approved	12.02.13	Groll

ASSMANN WSW components
1840 W. Drake Drive, Suite 101 • Tempe, AZ 85283
Toll Free: 1-877-277-6266 • Email: info@assmann.us

Title

ASSMANN WSW-No.
A-USBPA-2-R

Drawing-No.

rev01

Replace

Sheet 4/4