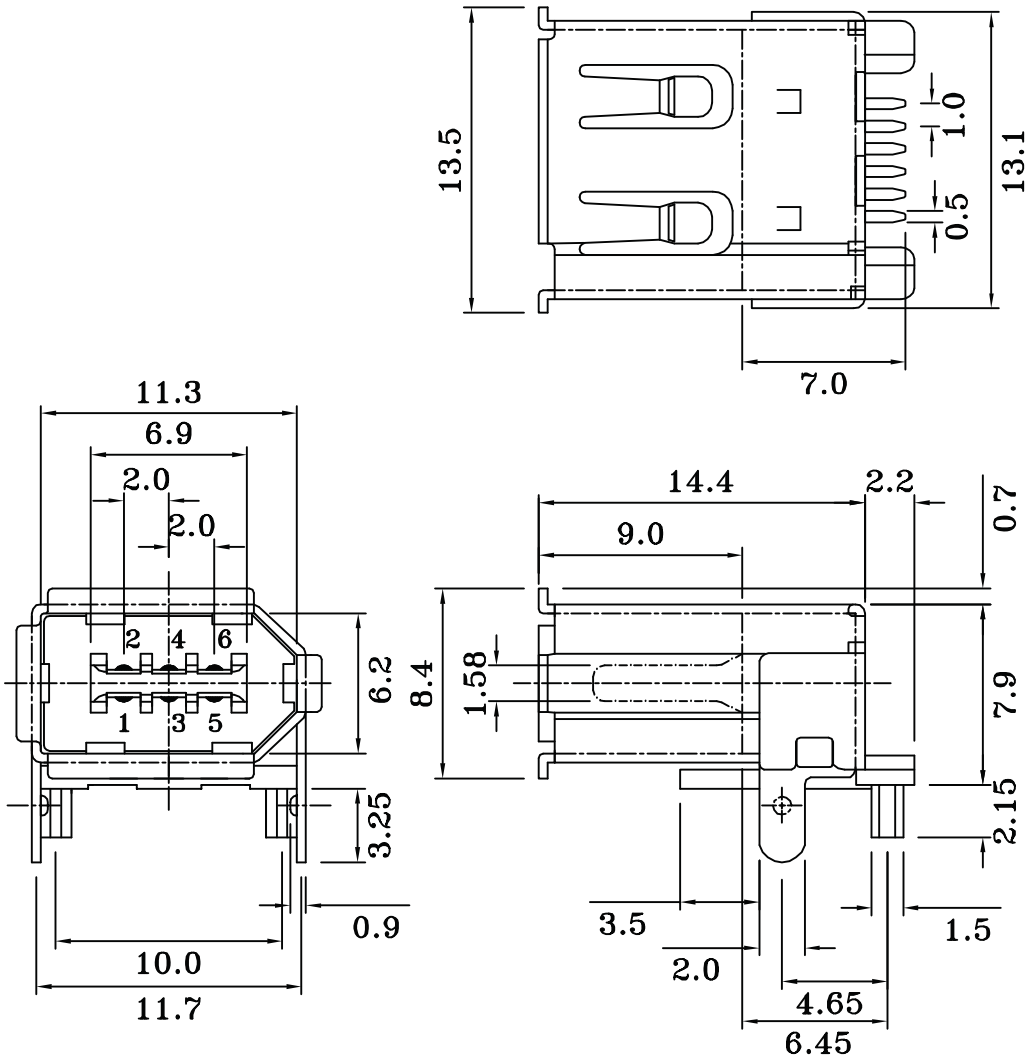

Material:

- Housing: Nylon PA9T G.F.
- Housing finish: Black
- Contact: Gold 30µ”
- Shell: Brass; t:0.4
- Shell finish: Nickel plated

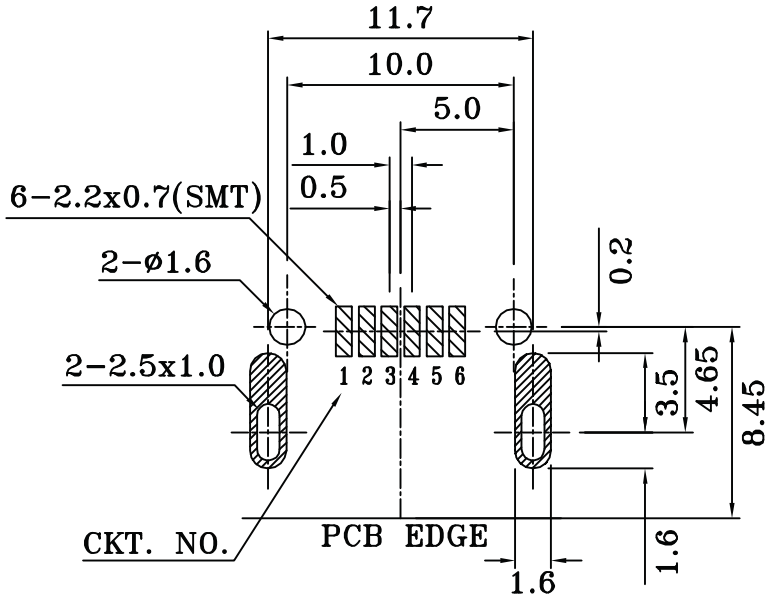

(COMPONENT SIDE)
PCB LAYOUT

Unit: mm

RoHS Compliant

Scale	3:1
TOLERANCE	
X.	±0.3
X.X	±X
X.XX	±X
DIM	TOL
X.°	±X°
X.X°	±X°
Angle	TOL

Id.	Modification	Date	Name
1	Updated all information	15.04.13	Wilson

	Date	Name
Drawn	19.10.11	Chappell
Approved	15.04.13	Groll

ASSMANN WSW components
1840 W. Drake Drive, Suite 101 • Tempe, AZ 85283
Toll Free: 1-877-277-6266 • Email: info@assmann.us

Title
IEEE 1394 Connector SMT
90°, for PCB mount, Female type

ASSMANN WSW-No.
A-IE-S-SMT-R

Drawing-No.

rev01

Replace

Sheet
1/1