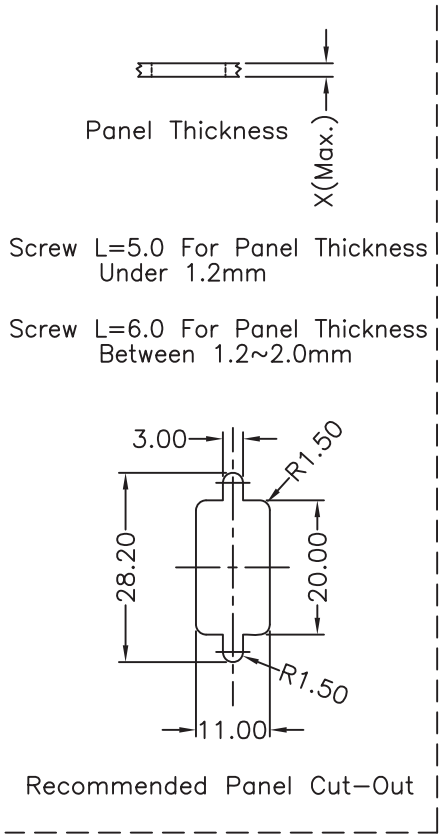

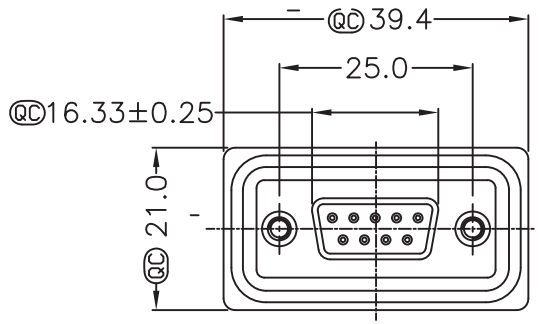

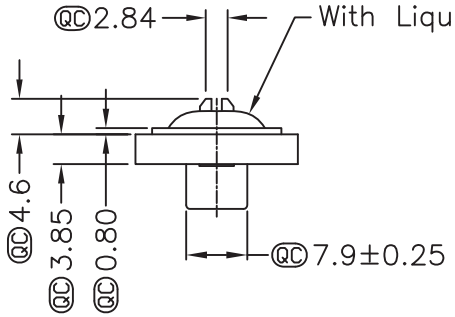

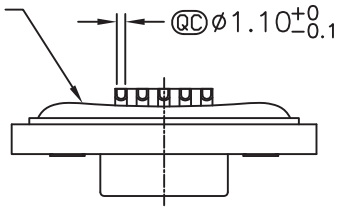

QC = Important Dimension

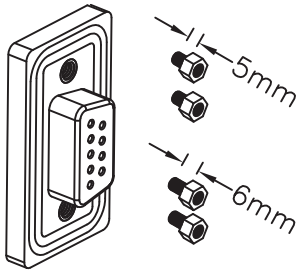

Material:
- Waterproof Rate: IP67
- Connector: Black, Nylon + GF
- Pin: Copper Alloy, Gold Plated
- Applicable Wire Range: 22AWG - 26AWG
- Insulators: PBT
- Max Torque on hex stand off: 9.92LB

Electrical:
- Current Rating: 5A
- Dielectric voltage: 500V AC / 1 Minute
- Insulation resistance: >500MΩ Min.
- Operating Temperature: -40°C to +105°C

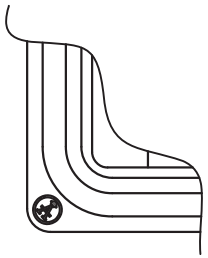

RoHS Complaint

Scale	1:1							Name
TOLERANCE						Drawn	11.22.11	Chappell
X.X	±0.40					Approved		
X.XX	±0.25							
X.XXX	±0.15							
Angle	±3°							
			Modification	Date	Name			

ASSMANN WSW components

Item No.
A-DF09LL-WP-R

Title: D-Sub Connector Waterproof, Solder Cup Version, Female, 9 Pin

Drawing No.

rev00

Replace

Sheet