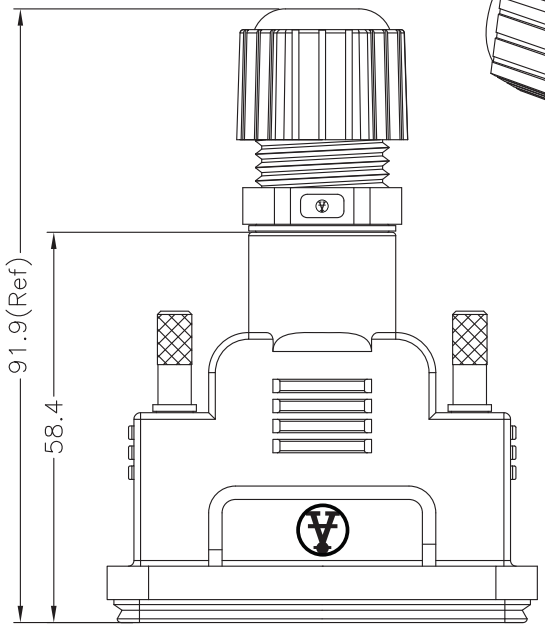

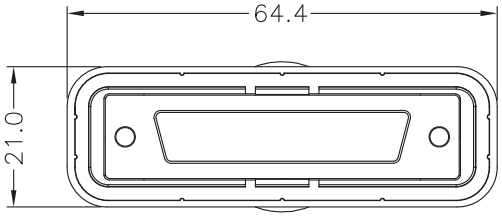

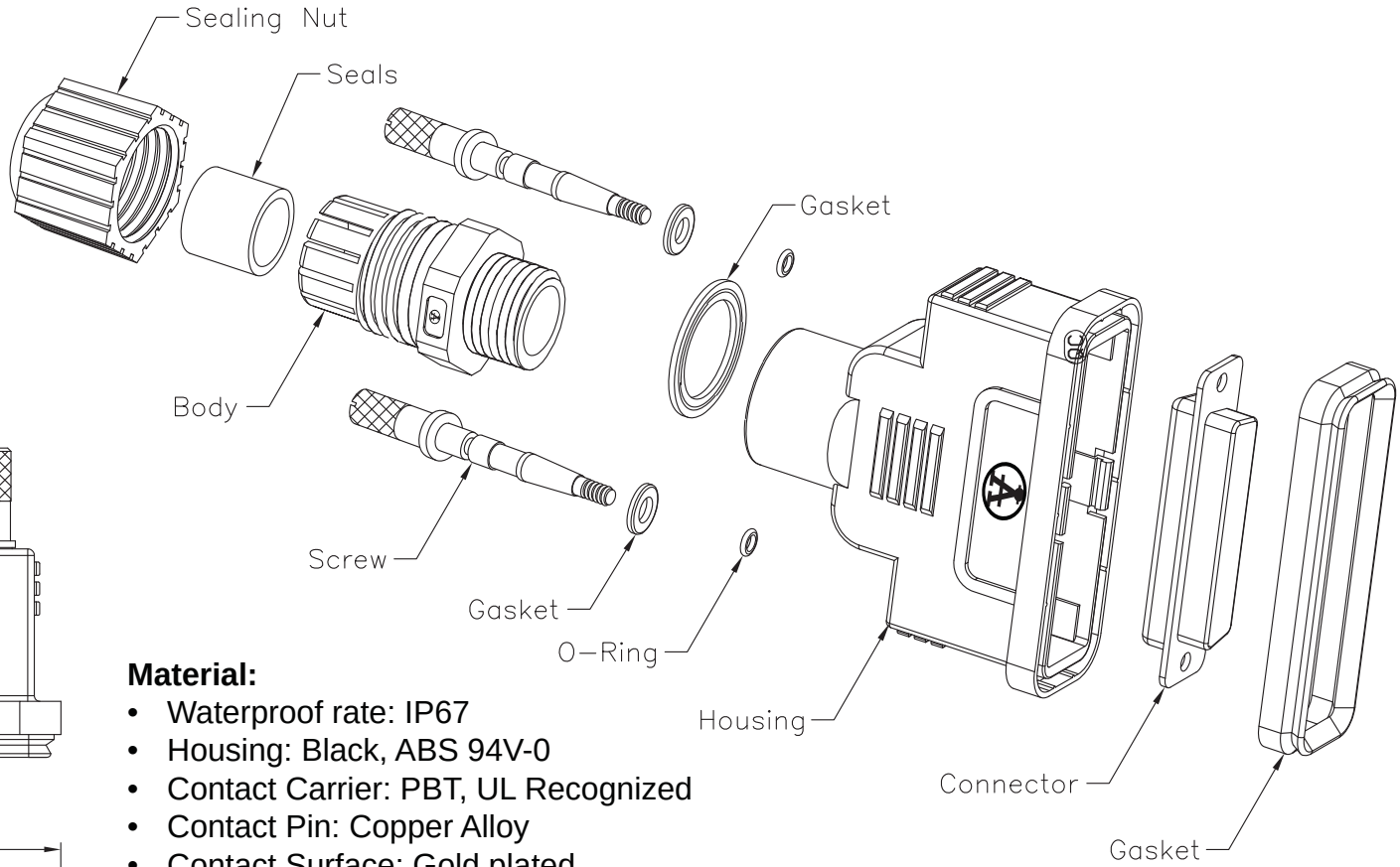

Material:

- Waterproof rate: IP67
- Housing: Black, ABS 94V-0
- Contact Carrier: PBT, UL Recognized
- Contact Pin: Copper Alloy
- Contact Surface: Gold plated
- Temperature range: -20℃ to 60℃
- Connector: HD-SUB 44pin Female or Male Shielded (solder pin)
- Seals for cable: OD: ø6.0mm~ø10.0mm
- One set unassembled in one(1) PE bag

Unit: mm

RoHS Compliant

Scale	Free
TOLERANCE	
X.	±0.5
X.X	±X
X.XX	±X
DIM	TOL
X.°	±X°
X.X°	±X°
Angle	TOL

Id.	Modification	Date	Name
1	Updated all information	08.03.13	Wilson

	Date	Name
Drawn	08.03.13	Wilson
Approved	08.03.13	Groll

ASSMANN WSW components
1840 W. Drake Drive, Suite 101 • Tempe, AZ 85283
Toll Free: 1-877-277-6266 • Email: info@assmann.us

Title
D-Sub Waterproof Assembly type
High Density, 44 pin Female or Male

ASSMANN WSW-No.
A-HDF44-HOOD-WP (female)
A-HDS44-HOOD-WP (male)

Drawing-No.

rev01

Replace

Sheet 1/1