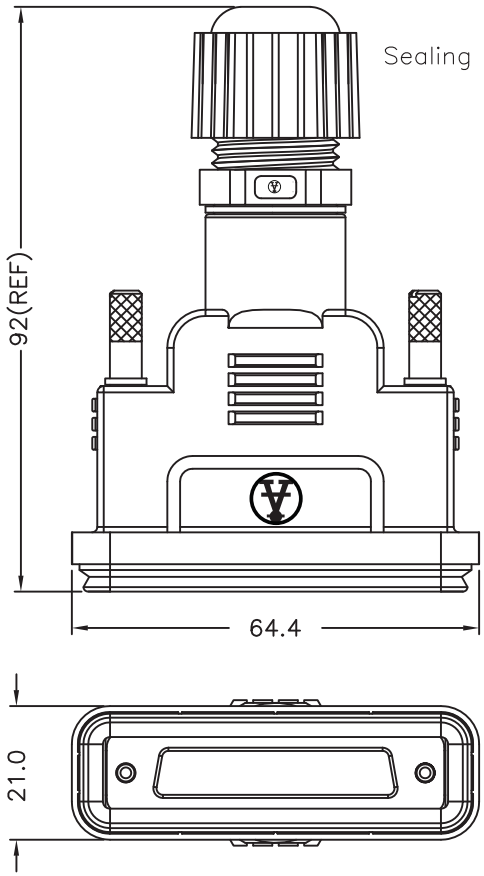

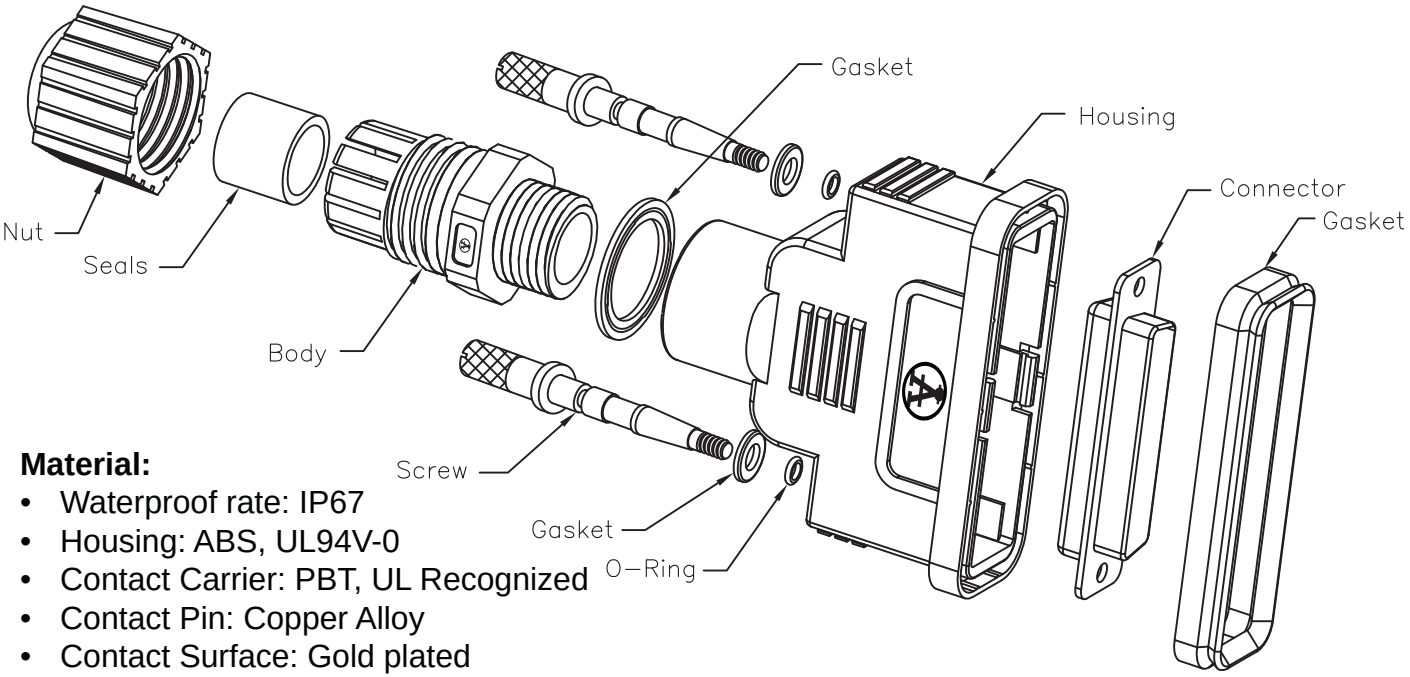

Material:

- Waterproof rate: IP67
- Housing: ABS, UL94V-0
- Contact Carrier: PBT, UL Recognized
- Contact Pin: Copper Alloy
- Contact Surface: Gold plated
- Screw: Brass, Nickel plated
- O-Ring: Silicone
- Body: Nylon
- Temperature range: -20℃ to 60℃
- Connector: D-SUB 25pin Female or Male Shielded (Solder pin)
- Gasket: EPDM
- Seal Nut: Nylon
- Seals for cable: OD: ø6.0mm~ø10.0mm
- One set unassembled in one(1) PE bag

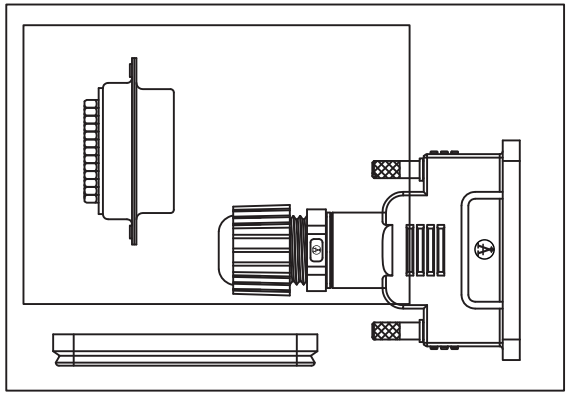

Unit: mm

RoHS Compliant

Scale	Free
TOLERANCE	
X.	±0.5
X.X	±X
X.XX	±X
DIM	TOL
X.°	±X°
X.X°	±X°
Angle	TOL

Id.	Modification	Date	Name
1	Updated all information	08.03.13	Wilson

	Date	Name
Drawn	08.03.13	Wilson
Approved	08.03.13	Groll

ASSMANN WSW components
1840 W. Drake Drive, Suite 101 • Tempe, AZ 85283
Toll Free: 1-877-277-6266 • Email: info@assmann.us

Title: D-Sub Waterproof Assembly type 25 pin Female or Male

ASSMANN WSW-No.: A-DF25-HOOD-WP (female) A-DS25-HOOD-WP (male)

Drawing-No.: rev01

Replace

Sheet: 1/1