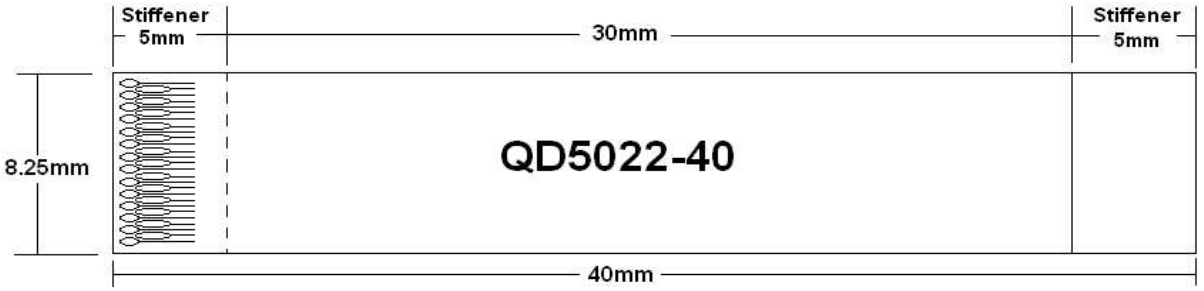

AD STYLE

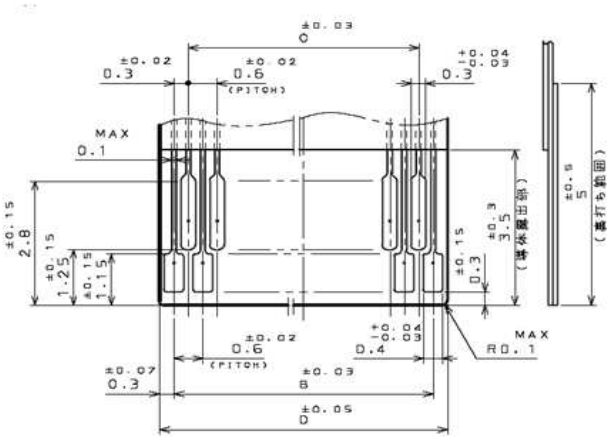

MATING CONDUCTOR PADS

DWG BY: MHB	12/22/2008	DRAWINGS ARE NOT TO SCALE. ALL DIMENSIONS ARE IN INCHES UNLESS OTHERWISE SPECIFIED. ALL TOLERANCES ARE +/- 0.50" UNLESS OTHERWISE SPECIFIED	
CHK BY:	DATE:		
APPR: -	DATE: -		

REVISION HISTORY

REV		DATE	APPROVED
--------	INITIAL RELEASE	12/22/08	MHB
A			
B			
C			
D			

Quadrangle Products Inc.

Quadrangle Products Inc.
28 Harrison Ave Suite 241
Englishtown, NJ 07726

Tel: 732-792-1234
Fax: 732-792-8305

© Copyright 2006 Quadrangle Products Inc.
This document is confidential and proprietary to Quadrangle Products Inc. and shall not be reproduced, copied, used, or issued as the basis of manufacturing and/or sale of equipment, material, or any other item. Quadrangle Products Inc. has the sole and exclusive ownership rights to this document and information contained herein.

QD5022-40