THE DRAWING ON THIS PRINT AND INFORMATION THEREWITH ARE PROPRIETARY TO VARITRONIX AND SHALL NOT BE USED IN WHOLE OR IN PART WITHOUT WRITTEN PERMISSION OF VARITRONIX.

ISSUE	AMENDMENT	DATE
1	UPDATE TABLE INFO	08.07.22
2	UPDATE DIMENSION & VOLTAGE	08.12.09

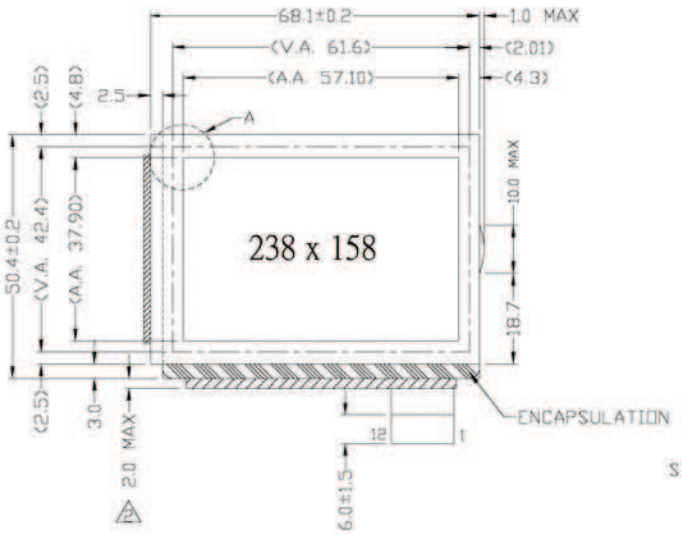

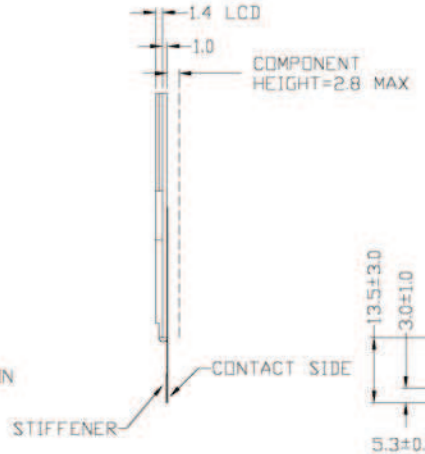

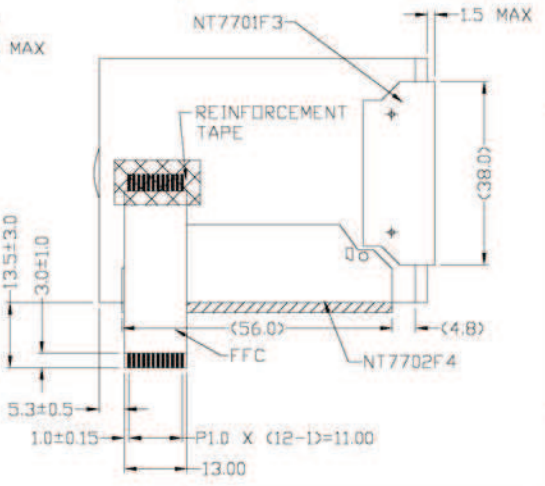

DETAIL A

(DOT SIZE FOR CUSTOMER REFERENCE ONLY)

BCD238158-03	DARK GREEN & LIGHT GREEN
BCD238158-02	RED & AMBER
BCD238158-01	BLUE & WHITE
DISPLAY TYPE	BCD, +VE, REFLECTIVE
DISPLAY RESOLUTION	238 X 158 + 4NSS
VIEWING ANGLE	ALL ANGLE
MUX RATIO & BIAS LEVEL	BCD DRIVING SCHEME
LCD CONTROLLER/DRIVER	NT7701F3 x 1, NT7702F4 x 1
LOGIC VOLTAGE	3V
LCD DRIVING VOLTAGE	29V
OPERATING TEMPERATURE	-0℃ to +50℃
STORAGE TEMPERTURE	-10℃ to +60℃
REMARK	

PINS ASSIGNMENT :

PIN NO.	1	2	3	4	5	6	7	8	9	10	11	12
SYMBOL	FLM	M	CL1	CL2	$\overline{DOFF}$	D0	D1	D2	D3	VSS	VDD	VEE

NOTES:
1. ◇ : SPECIAL CHARACTERISTIC
2. + : SAFETY CHARACTERISTIC
3. ▽ : CRITICAL DIMENSION
4. ( ) : REFERENCE DIMENSION

VARITRONIX LIMITED

TITLE: LCM Module Specification

PROJECT NO: BCD238158

CUSTOMER REF: N/A

TOLERANCE UNLESS OTHERWISE SPECIFIED: DIMENSIONS IN MM	X.X ±0.3 X.XX ±0.1 ANGULAR: ± 1°
MATERIAL: N/A	FINISH: N/A
SCALE: DO NOT ON SCALE	OVERALL THK: N/A
THIRD ANGLE PROJECTION	

	NAME	SIGN	DATE
DRAWN:	ZL XIE		08.12.09
CHECKED:	XIE HU		
APPROVED:	YL LAW		

ITEM NO.: BCD238158-XX

DESCRIPTION: BCD238158-XX SPEC.

FILE NO: BCD238158-XX R2.DWG REV: 2

SHEET 1 OF 1