THE DRAWING ON THIS PRINT AND INFORMATION THEREWITH ARE PROPRIETARY TO VARITRONIX AND SHALL NOT BE USED IN WHOLE OR IN PART WITHOUT WRITTEN PERMISSION OF VARITRONIX.

ISSUE	AMENDMENT	DATE

PRELIMINARY

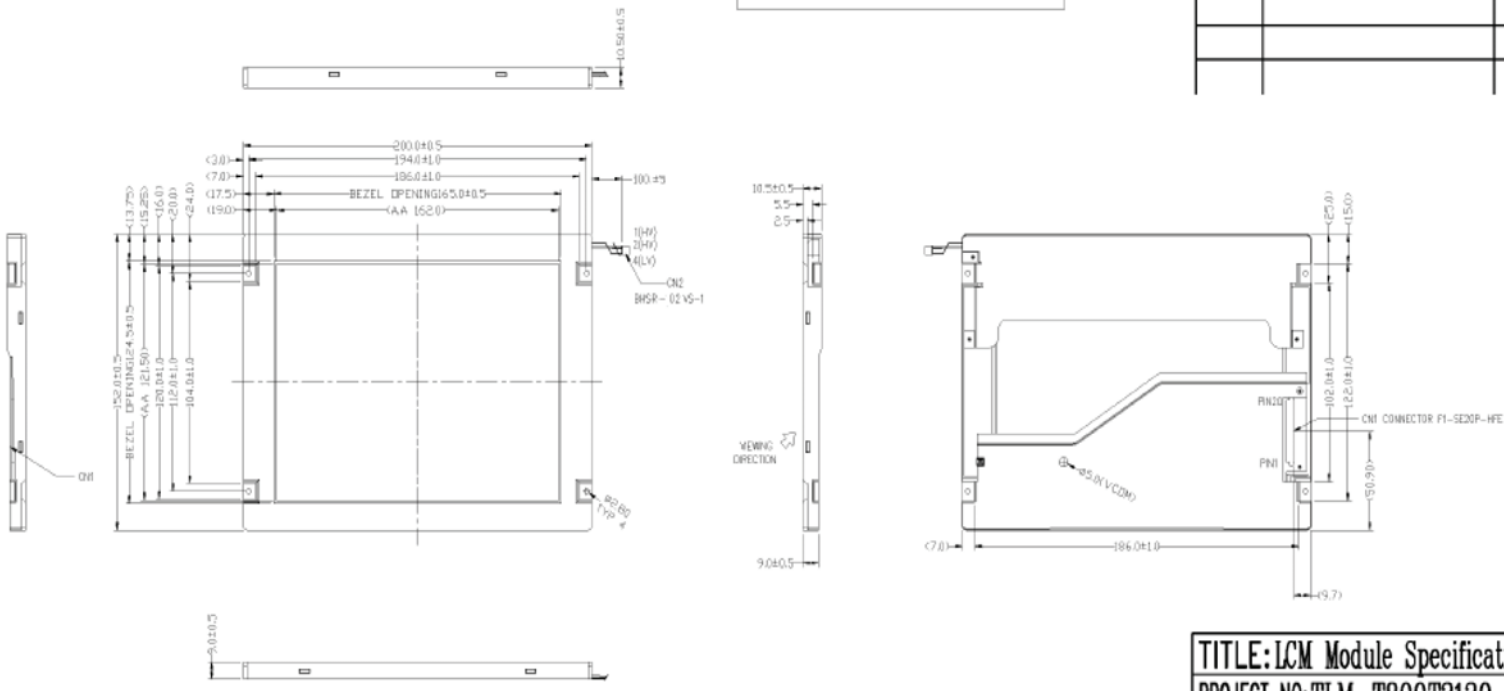

DISPLAY TYPE	8" TFT, POSITIVE, TRANSMISSIVE		
DISPLAY RESOLUTION	800 (RGB) X 600		
VIEWING ANGLE	6 o'clock		
MUX AND BIAS RATIO	1/600 DUTY		
DRIVING VOLTAGE(V)	VDD= 3.3V (TYP.)		
OPERATION TEMPERATURE	-20 TO +80 DEGREE C		
STORAGE TEMPERATURE	-20 TO +80 DEGREE C		
BACKLIGHT	TYPE	LED	
	COLOR	WHITE	
	Voltage	TBD	
	LUMINANCE (ON THE BACKLIGHT SURFACE)	MIN.	--
		TYP.	TBD
		MAX.	--
REMARK			

PIN ASSIGNMENT

1	2	3	4	5	6	7	8	9	10
D3+ / GND	D3-/GND	DPS	FRC	GND	CK+	CK-	DB1	D2+	D2-

11	12	13	14	15	16	17	18	19	20
GND	D1+	D1-	GND	D0+	D0-	GND	GND	VDD	VDD

NOTES:
1. ◇ : SPECIAL CHARACTERISTIC
2. + : SAFETY CHARACTERISTIC
3. ▽ : CRITICAL DIMENSION
4. ( ) : REFERENCE DIMENSION

VARITRONIX

VARITRONIX LIMITED

TITLE: LCM Module Specification

PROJECT NO: TLM-T800T3130-01

CUSTOMER REF:

TOLERANCE UNLESS OTHERWISE SPECIFIED:	X.X ±0.3 X.XX ±0.1
DIMENSIONS IN MM	ANGULAR: ± 1°
MATERIAL: N/A	FINISH: N/A
SCALE: DO NOT ON SCALE	OVERALL THK: N/A

THIRD ANGLE PROJECTION

	NAME	SIGN	DATE
DRAWN:	KWOK KA LOK		08.05.07
CHECKED:	PHILIP HO		
APPROVED:	CYRUS CHEUNG		

ITEM NO.: TLM-T800T3130-01

DESCRIPTION: TLM-T800T3130

FILE NO: TLM-T800T3130-01-R0 REV: 0

SHEET 1 OF 1