THE DRAWING ON THIS PRINT AND INFORMATION THEREWITH ARE PROPRIETARY TO VARITRONIX AND SHALL NOT BE USED IN WHOLE OR IN PART WITHOUT WRITTEN PERMISSION OF VARITRONIX

PRELIMINARY

(DOT SIZE FOR CUSTOMER REFERENCE ONLY)

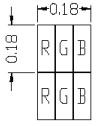

DETAIL A

ISSUE	AMENDMENT	DATE

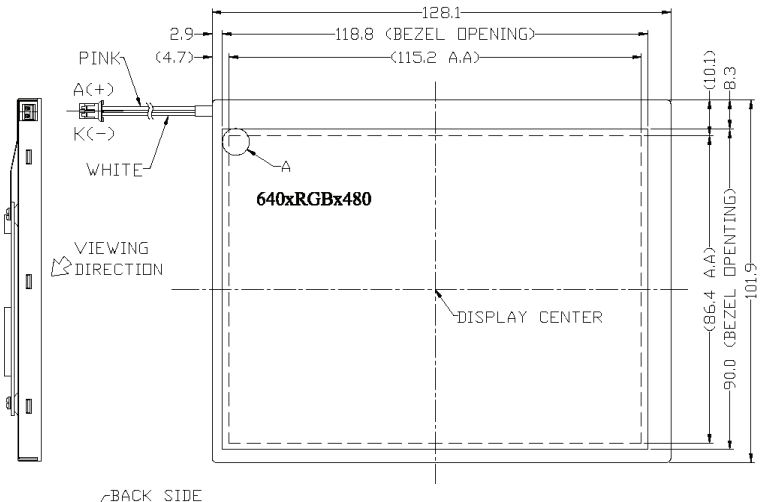

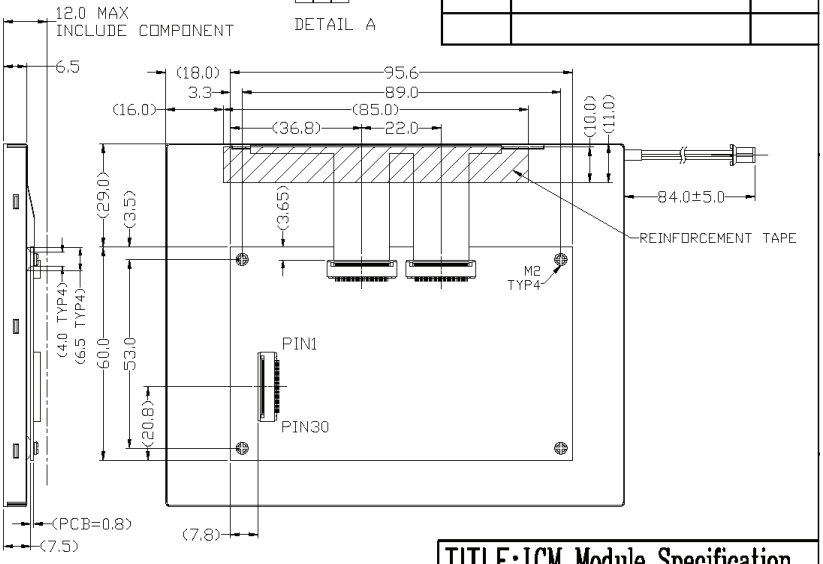

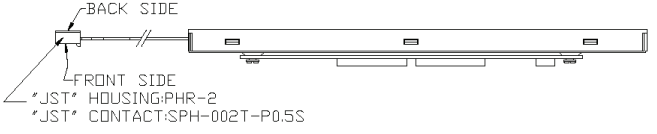

PINS ASSIGNMENT:

1	2	3	4	5	6	7	8	9	10	11
CLK	HSYNC	VSYNC	GND	R0	R1	R2	R3	R4	R5	GND
12	13	14	15	16	17	18	19	20	21	22
G0	G1	G2	G3	G4	G5	GND	B0	B1	B2	B3
23	24	25	26	27	28	29	30			
B4	B5	GND	DENB	VCC	VCC	RLA	UDA			

BACKLIGHT CONNETOR:

A	K
ANODE	CATHODE

DISPLAY TYPE	5.7" TFT, +VE, TRANSMISSIVE	
DISPLAY RESOLUTION	640 X RGB X 480	
VIEWING ANGLE	12 O'CLOCK	
DRIVING VOLTAGE (VCC)	+3.3V	
OPERATING TEMPERATURE	-20 TO +70 DEGREE C	
STORAGE TEMPERATURE	-30 TO +80 DEGREE C	
BACKLIGHT (@25°C)	TYPE	LED
	COLOR	WHITE
	DRIVING VOLTAGE (TYP.)	~19.0V @ 100mA
	LUMINANCE(CD/M2) (ON THE BACKLIGHT SURFACE)	350cd/m2
REMARK		

NOTES:
1. ◇ : SPECIAL CHARACTERISTIC
2. + : SAFETY CHARACTERISTIC
3. ▽ : CRITICAL DIMENSION
4. (..) : REFERENCE DIMENSION

VARITRONIX

VARITRONIX LIMITED

TITLE: LCM Module Specification

PROJECT NO: TLM-T570T2110-01

CUSTOMER REF:

TOLERANCE UNLESS OTHERWISE SPECIFIED:	X.X ±0.3 X.XX ±0.1
DIMENSIONS IN MM	ANGULAR: ± 1°
MATERIAL: N/A	FINISH: N/A
SCALE: DO NOT ON SCALE	OVERALL THK: N/A

THIRD ANGLE PROJECTION

	NAME	SIGN	DATE
DRAWN:	KWOK KA LOK		08.03.05
CHECKED:	PHILIP HO		
APPROVED:	CYRUS CHEUNG		

ITEM NO.: TLM-T570T2110-01

DESCRIPTION: TLM-T570T2110

FILE NO: TLM-T570T2110-01-R0 REV: 0

SHEET 1 OF 1