THE DRAWING ON THIS PRINT AND INFORMATION THEREWITH ARE PROPRIETARY TO VARITRONIX AND SHALL NOT BE USED IN WHOLE OR IN PART WITHOUT WRITTEN PERMISSION OF VARITRONIX.

ISSUE	AMENDMENT	DATE
1	Updating info. on the REMARK table	11.08.18

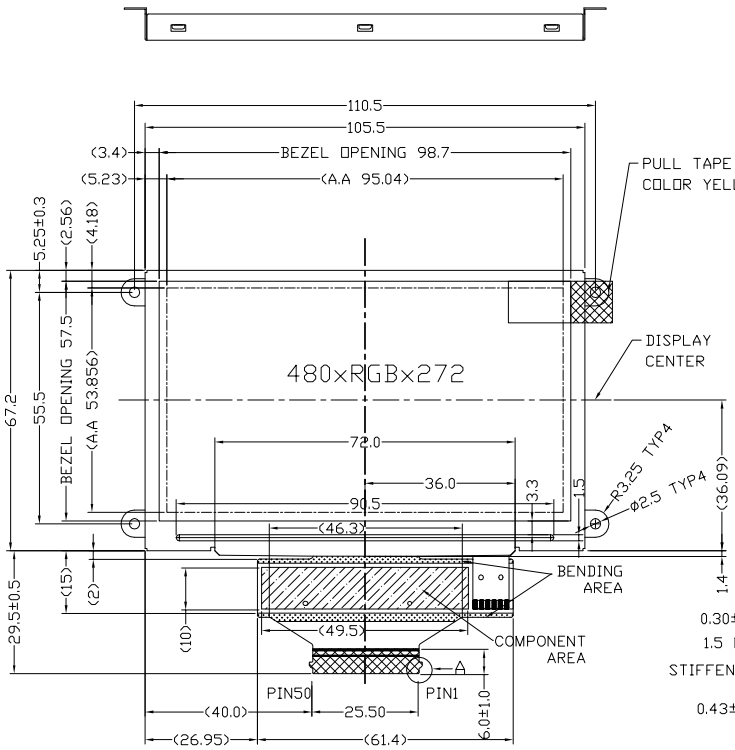

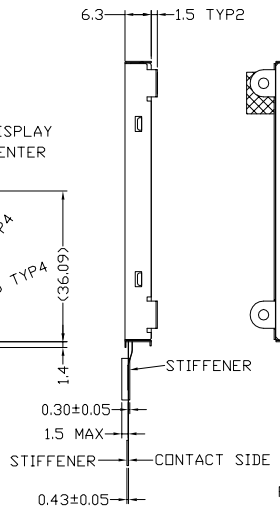

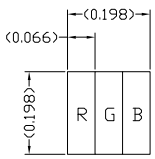

(DOT SIZE FOR CUSTOMER REFERENCE ONLY)

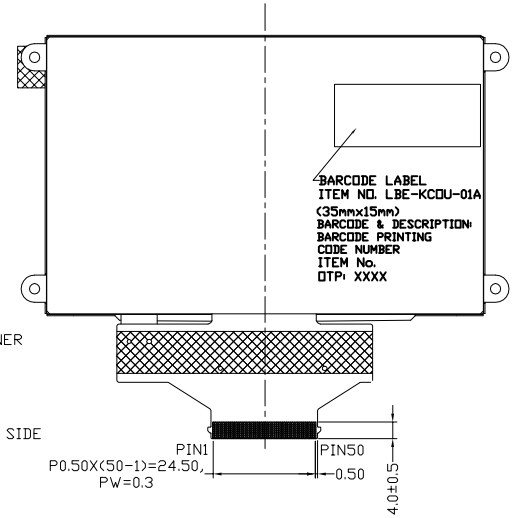

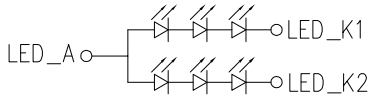

BL CIRCUIT DIAGRAM:

DISPLAY TYPE	4.3" TRANSMISSIVE, COLOR TFT		
DISPLAY RESOLUTION	480 x RGB x 272		
DISPLAY MODE	NORMALLY BLACK		
INPUT VOLTAGE (VDD)	3.3V (TYP.)		
OPERATING TEMPERATURE	-20 TO +70 °C		
STORAGE TEMPERATURE	-30 TO +80 °C		
UNIFORMITY ON MODULE SURFACE	75%		
LUMINANCE ON MODULE SURFACE (Cd/m2)	400 (MIN.) / 450 (TYP.)		
BACKLIGHT	TYPE	WHITE LED	
	FORWARD CURRENT (CURRENT DRIVEN)	70mA / LED STRING TOTAL 140mA	
	FORWARD VOLTAGE	MIN	–
		TYP	10.5V
		MAX	12.0V

REMARK

PIN ASSIGNMENT:

1	2	3	4	5	6	7	8	9	10
LED_A	NC	LED_K1	LED_K2	NC	NC	GND	VDD	VSYNC	HSYNC
11	12	13	14	15	16	17	18	19	20
GND	DCLK	GND	CS	SDA	SCL	DE	DISP	RESET	GND
21	22	23	24	25	26	27	28	29	30
R7	R6	R5	R4	GND	R3	R2	R1	R0	GND
31	32	33	34	35	36	37	38	39	40
G7	G6	G5	G4	GND	G3	G2	G1	G0	GND
41	42	43	44	45	46	47	48	49	50
B7	B6	B5	B4	GND	B3	B2	B1	B0	GND

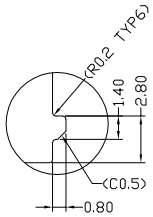

DETAIL A

NOTES:
1. ◇ : SPECIAL CHARACTERISTIC
2. + : SAFETY CHARACTERISTIC
3. ▽ : CRITICAL DIMENSION
4. (..) : REFERENCE DIMENSION

VARITRONIX

VARITRONIX LIMITED

TITLE: LCM Module Specification

PROJECT NO: COG-T430V2100-X1

CUSTOMER REF: N/A

TOLERANCE UNLESS OTHERWISE SPECIFIED: X.X±0.3, X.XX±0.1, ANGULAR: ± 1°

DIMENSIONS IN MM

MATERIAL: N/A FINISH: N/A

SCALE: DO NOT ON SCALE OVERALL THK: N/A

THIRD ANGLE PROJECTION

	NAME	SIGN	DATE
DRAWN:	Jackson Tang		11.08.18
CHECKED:	Y.M. Chan		
APPROVED:	Leo Chow		

ITEM NO.: COG-T430V2100-X1

DESCRIPTION: COG-T430V2100-X1 SPEC

FILE NO: COG-T430V2100-X1_R1.DWG REV: 1

SHEET 1 OF 1