THE DRAWING ON THIS PRINT AND INFORMATION THEREWITH ARE PROPRIETARY TO VARITRONIX AND SHALL NOT BE USED IN WHOLE OR IN PART WITHOUT WRITTEN PERMISSION OF VARITRONIX.

ISSUE	AMENDMENT	DATE

PRELIMINARY

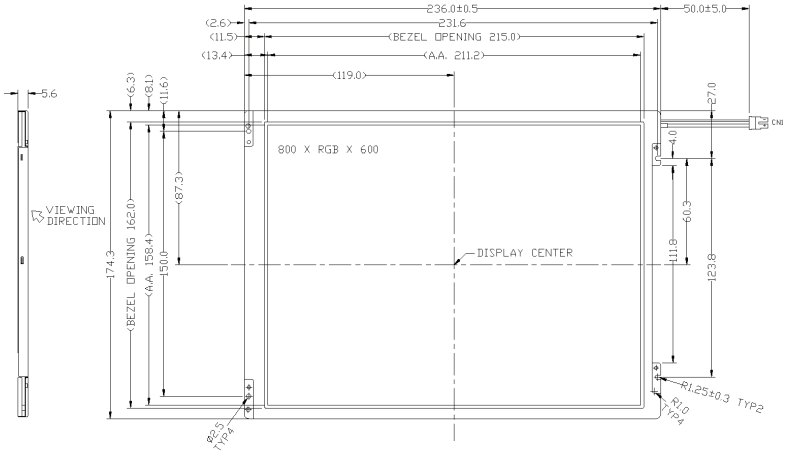

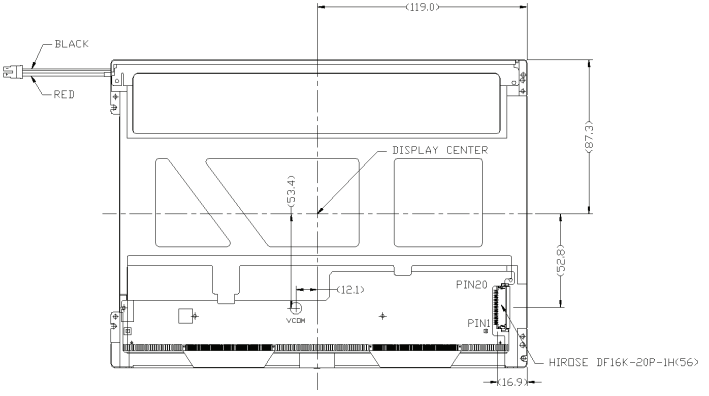

1	2	3	4	5	6	7	8	9	10
VDD	VDD	GND	GND	IN0-	IN0+	GND	IN1-	IN+	GND
11	12	13	14	15	16	17	18	19	20
IN2-	IND+	GND	CLK-	CLK+	GND	NC	NC	GND	GND

DISPLAY TYPE	10.4" TRASMISSIVE, 262K COLOR TFT	
DISPLAY RESOLUTION	800 X RGB X 480	
INPUT VOLTAGE FOR GATE DRIVER(VDD)	+3.3V (TYP.)	
OPERATING TEMPERATURE	-20 TO +70 DEGREE C	
STORAGE TEMPERATURE	-20 TO +70 DEGREE C	
BACKLIGHT	TYPE	LED
	COLOR	WHITE
	DRIVING CONDITION	10.0V(TYP.) @20mA
	LUMINANCE (ON THE MODULE SURFACE)	400 CD/M2
REMARK		

NOTES:
1. ◇ : SPECIAL CHARACTERISTIC
2. + : SAFETY CHARACTERISTIC
3. ▽ : CRITICAL DIMENSION
4. (..) : REFERENCE DIMENSION

VARITRONIX

VARITRONIX LIMITED

TITLE: LCM Module Specification

PROJECT NO: TLM-TA40T3130

CUSTOMER REF:

TOLERANCE UNLESS OTHERWISE SPECIFIED: X.X ±0.3, X.XX ±0.1, ANGULAR: ± 1°

DIMENSIONS IN MM

MATERIAL: N/A | FINISH: N/A

SCALE: DO NOT ON SCALE | OVERALL THK: N/A

THIRD ANGLE PROJECTION

	NAME	SIGN	DATE
DRAWN:	KWOK KA LOK		08.09.11
CHECKED:	PHILIP HO		
APPROVED:	CYRUS CHEUNG		

ITEM NO.: TLM-TA40T3130-01

DESCRIPTION: TLM-TA40T3130

FILE NO: TLM-TA40T3130-01-R0 | REV: 0

SHEET 1 OF 1