ISSUE	AMENDMENT	DATE
1	UPDATE DIMENSION ADDED NOTES	02.06.10

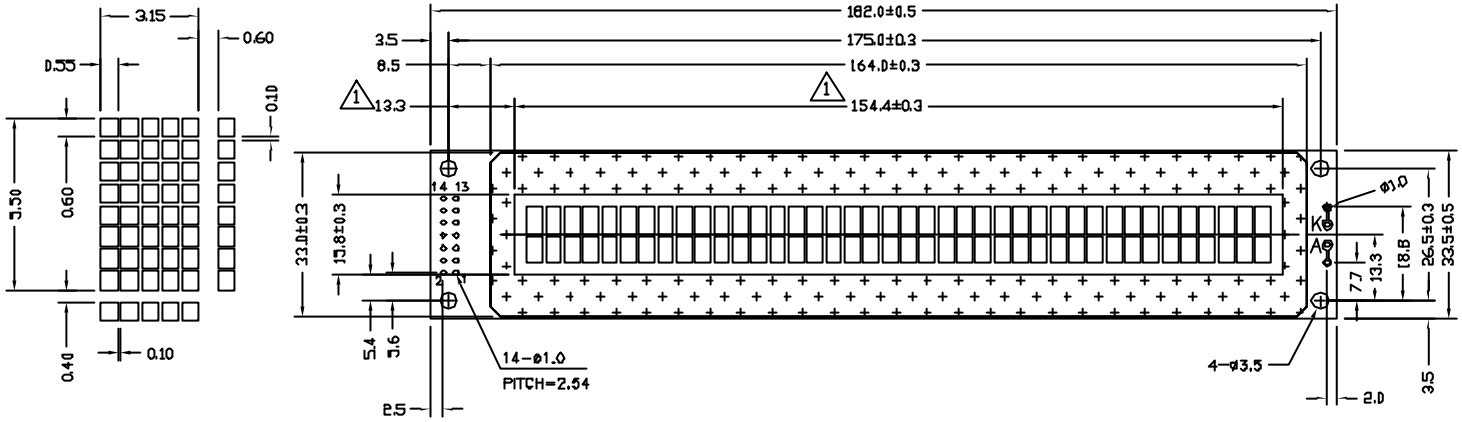

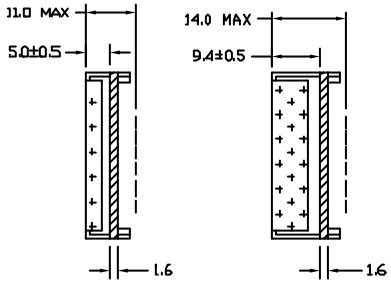

NO LED OR WITH EL

WITH LED04

14 PIN CONNECTION	1	2	3	4	5	6	7	8	9	10	11	12	13	14	A	K
	VSS	VDD	V0	RS	R/W	E	DB0	DB1	DB2	DB3	DB4	DB5	DB6	DB7	LED(+)	LED(-)

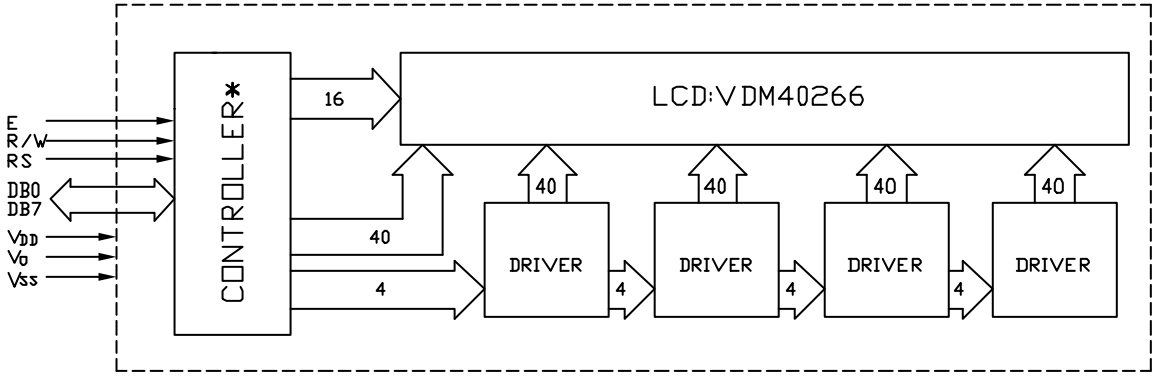

*SPLC780A1 OR EQUIVALENT

1
NOTES:
"◇" SPECIAL CHARACTERISTIC
"+" SAFETY CHARACTERISTIC
"()" REFERENCE ONLY
"▽" CRITICAL DIMENSION

VARITRONIX LIMITED

TITLE: SPECIFICATION OF MODULE			
PROJECT NO: MDLS40266SP			
TOLERANCE UNLESS OTHERWISE SPECIFIED:	X.X ±0.3 X.XX ±0.1		
DIMENSIONS IN MM			
MATERIAL:	FINISH:		
SCALE: DO NOT ON SCALE	THICKNESS:		
THIRD ANGLE PROJECTION			
	NAME	SIGN	DATE
DRAWN	LUO XIAN GANG		02.06.10
CHECKED	HE JIAN WEN		
APPROVED	YL LAW		
ITEM NO. MDLS40266SP-XX			
DESCRIPTION: MDLS40266SP			
FILE NO: MDLS40226SP-XX R1.DWG		REV 1	
SHEET 1 OF 1			